TECHNICAL INFORMATION

Model No. ► VC3211M

Description ► Vacuum Cleaner

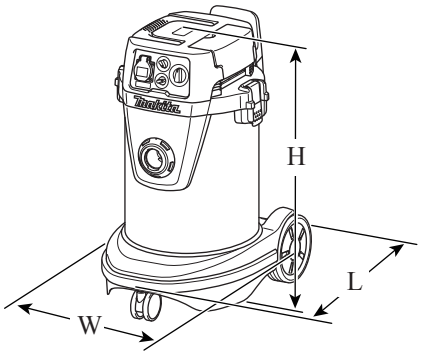

Dimensions: mm (")	
Length (L)	552 (21-3/4)
Width (W)	398 (15-5/8)
Height (H)	685 (27)

CONCEPT AND MAIN APPLICATIONS

Model VC3211M is a Wet & Dry vacuum cleaner developed based on Model VC3210L.
This product is approved for Dust Class M in accordance with the EU standard.
Its main benefits are:

- New automatic self-cleaning filtration system of our unique design
- Power tool activation*
- 32 Liter stainless steel tank*
- High maneuverability and easy mobility*

*The same advantage as Model VC3210L

This model is also available with cleaning set as VC3211MX1.
(See "Standard equipment" for what the cleaning set includes.)

► Specification

Voltage (V)	Current (A)	Cycle (Hz)	Continuous Rating (W)		Max. Output (W)
			Input	Output	
110	10.0	50/60	1,050	---	---
230	4.8	50/60	1,050	---	---
240	4.6	50/60	1,050	--	---

Wet/Dry type		Wet & Dry
Power tool activation		Yes
Dust class in accordance with the EU standard		M
Max. sealed suction: kPa		22.0
Max. air flow: m^3/minute		2.0*1/ 3.5*2
Tank capacity: L	Water	27
	Dust	32
Noise: dB		73
Variable suction power control by dial		Yes
Protection from electric shock		Grounding
Power supply cord: m (ft)		5.0 (16.4)
Weight according to EPTA-Procedure 01/2003*3: kg (lbs)		16.9 (37.3)

***1**: with Hose complete 28-3.5 ***2**: with Hose complete 38-2.5
***3**: with Poly bag 800x650

► Standard equipment

For All models:

Hose complete 28-3.5 set 1
(incl. Front cuff 38)
Front cuff 22 1
Front cuff 24 1
Belt hook 1
Hose band 1
Cap 1
Poly bag 800x650 1
Poly bag set 1
(incl. 10 pcs of Poly bag 800x650)

For VC3211MX1 only:

Cleaning set..... 1
Includes one each of:
-Hose complete 38-2.5
-Straight pipe
-Bending pipe
-Nozzle assembly
-Corner nozzle

► Optional accessories

Hose complete 28-2.5/ 28-3.5/
28-5.0/ 38-2.5/ 38-5.0
Front cuff 22/ 24/ 38
Filter bag set (5pcs/set)
Poly bag set (10 pcs/set)
Powder filter, Damper, Prefilter
Straight pipe, Bending pipe, Nozzle assembly,
Corner nozzle, Anchor nozzle, Round brush,
Cap, Cleaning set, Nozzle for wet application,
Belt hook, Hose band

Note: The standard equipment for the tool shown above may vary by country.

Repair

CAUTION: Repair the machine in accordance with “Instruction manual” or “Safety instructions”.

CAUTION: When performing startup test of the AC motor with the motor section separated from the Tank section, be sure to hold the Motor section firmly, or it will move around.

CAUTION: When cleaning dust filtration parts or removing dust from other contaminated parts, be sure to use Acrylic dust box (Code No. 1R276) so as not to scatter dust.

[1] NECESSARY REPAIRING TOOLS

Code No.	Description	Use for
1R023	Pipe ring (for arbor press)	press-fitting Fan cover onto Return vane
1R258	V-Block	press-fitting Fan cover onto Return vane
1R263	Bearing extractor	removing Caster 75
1R275	Type 94 field insert jig	press-fitting Caster 75
1R276	Acrylic dust box	removing dust from the machine
1R291	Retaining ring S and R pliers	removing/installing Retaining rings
1R344	Torque driver	tightening M5x60 Pan head screws through Endbell and Field into Base

[2] LUBRICANT/ADHESIVE APPLICATION

Apply Makita grease N.No.2 to the following portions designated by black triangle to protect parts and product from unusual abrasion.. (**Fig.1**)
Apply ThreeBond 1215 to Rubber ring 120 and Seal ring.
See step (3) of "ASSEMBLING" in **[3]-1. Motor section** for Rubber ring 120,
and "ASSEMBLING" in **[3]-2. Inner cover** for Seal ring.

Item No.	Description	Portion to lubricate	Amount
㉑	O ring 9	whole surface	a little
㉓	O ring 9	whole surface	a little
㉕	O ring 14	whole surface	a little
㉝	Gear case	gear chamber where planetary gears engage with Internal gear 42	approx. 3g
㊽	O ring 20	whole surface	a little

Fig. 1

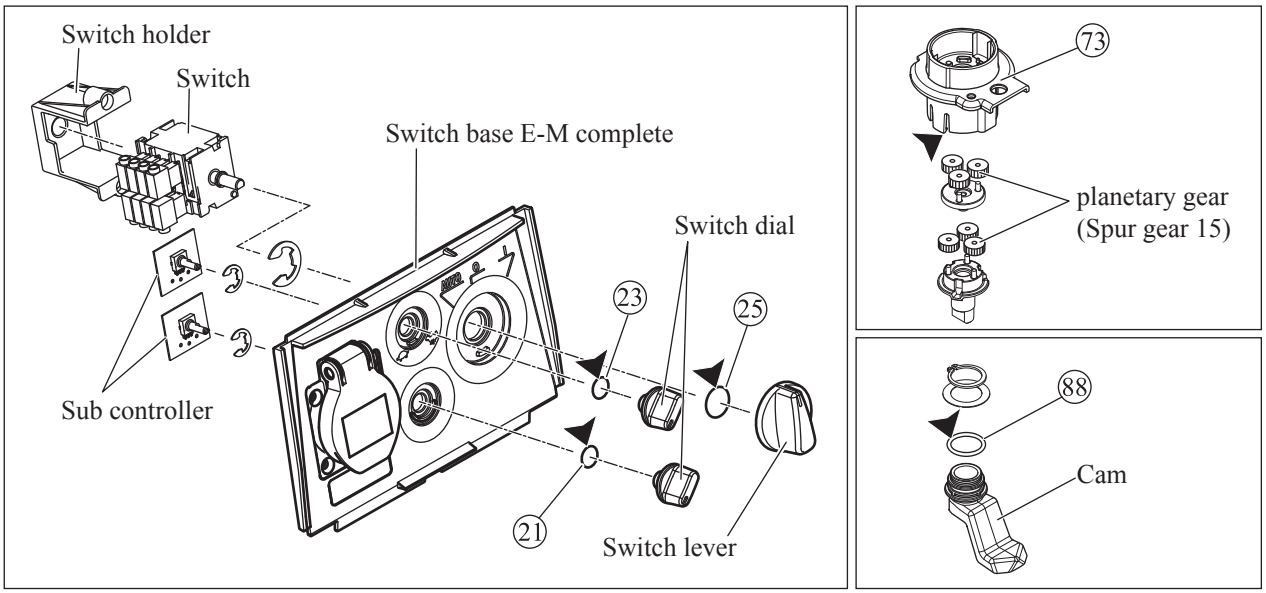

Repair

[3] DISASSEMBLY/ ASSEMBLY

[3]-1. Motor section

DISASSEMBLING

(1) Unlock two hooks to separate Motor section from Tank section. (**Fig. 2**)
(2) Raise Grip and open Base hook, then remove nine 4x35 Tapping screws to remove Base grip and Cowling complete from Separator complete. Switch base E-M complete can be now be removed. (**Fig. 3**)
(3) Remove Receptacle terminals of Field from Controller. (**Fig. 4b**)
(4) Remove Vinyl tube from the hole beside DC motor unit. (**Fig. 4a**)
(5) Remove seven 4x35 Tapping screws (five screws fastening Separator complete to Tank cover complete and two screws fastening DC motor unit to Tank cover complete). (**Fig. 4**)
(6) Remove DC motor unit from Tank cover complete. (**Fig. 5**)
Note: Be careful not to drop Spindle assembly out of DC motor unit.
DC motor unit can be disassembled as shown in **Fig. 6**.

Fig. 2

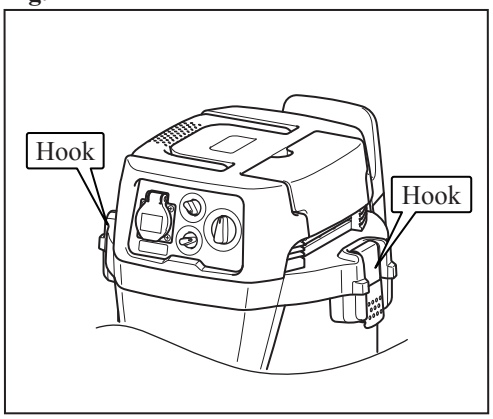

Fig. 3

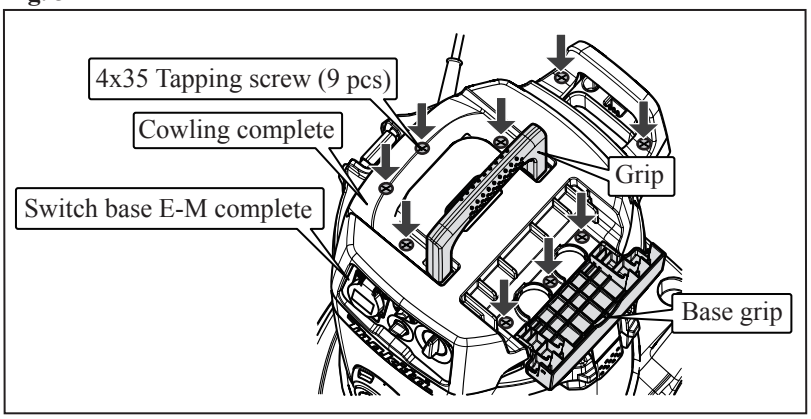

Fig. 4

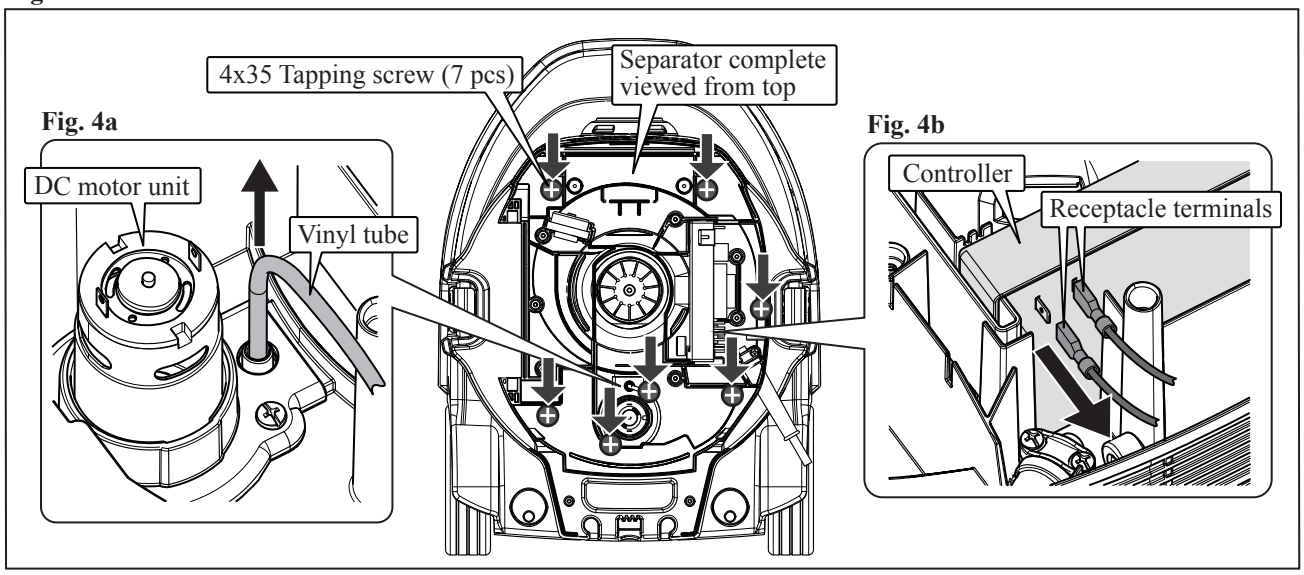

Fig. 5

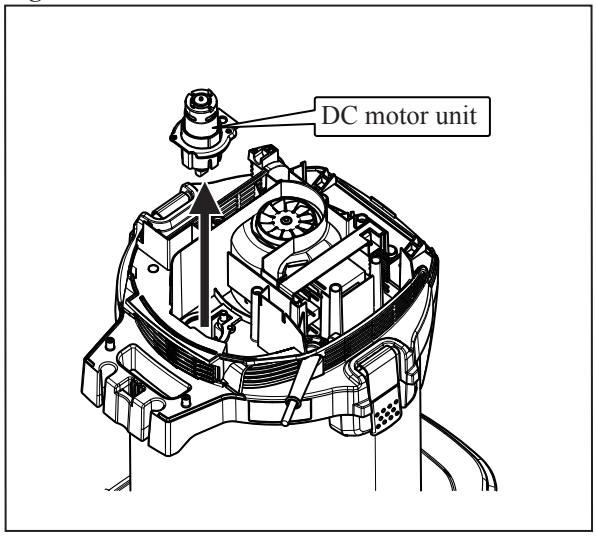

Fig. 6

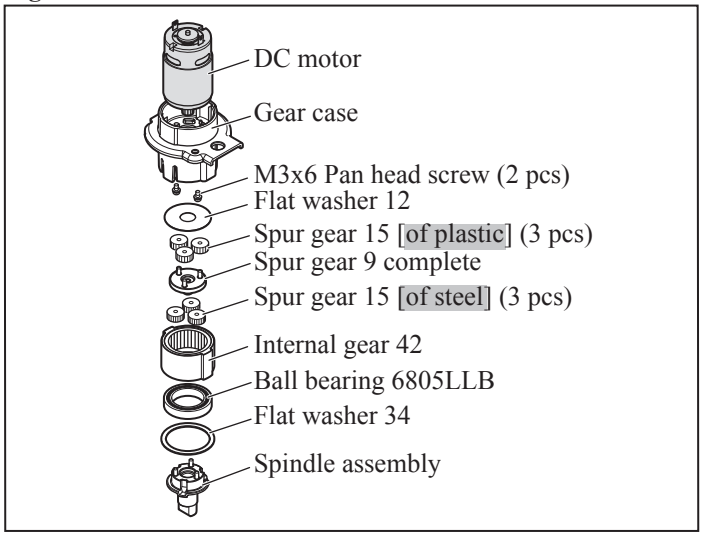

Repair

[3] DISASSEMBLY/ ASSEMBLY

[3]-1. Motor section (cont.)

DISASSEMBLING

(7) Take two Closed end splices out of the splice storage compartment to allow the lead wire of each of two Lead units to have slack in it. (**Fig. 7**)

(8) With the lead wire of Lead units slack, remove Separator complete from Tank cover complete. then remove AC motor unit. (**Fig. 8**)

Fig. 7

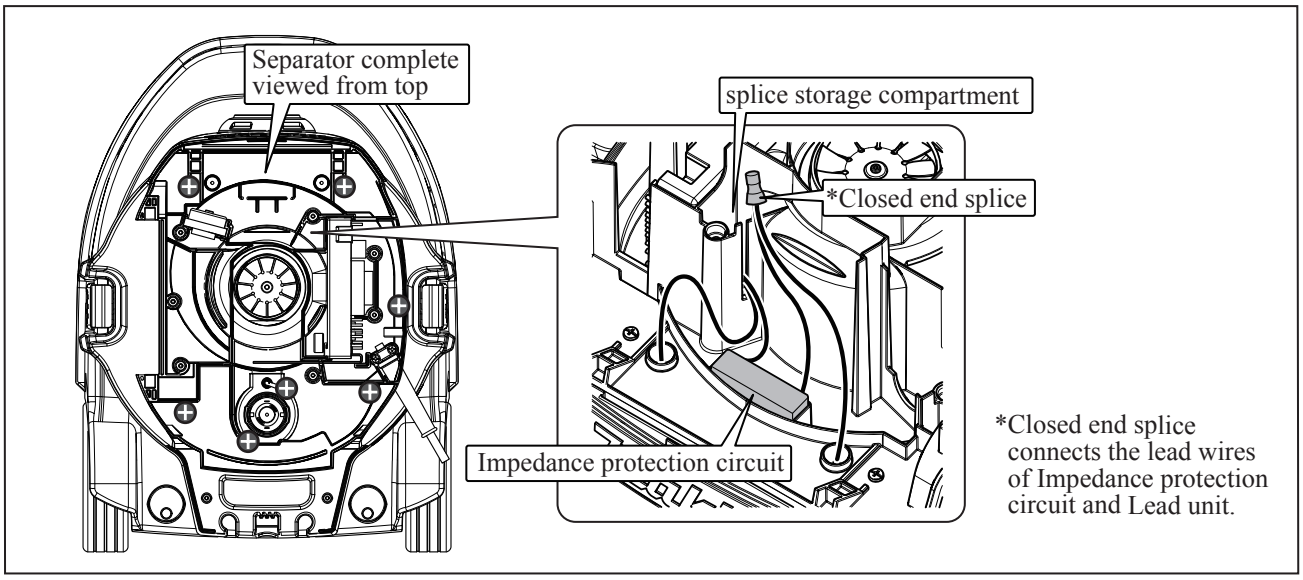

Fig. 8

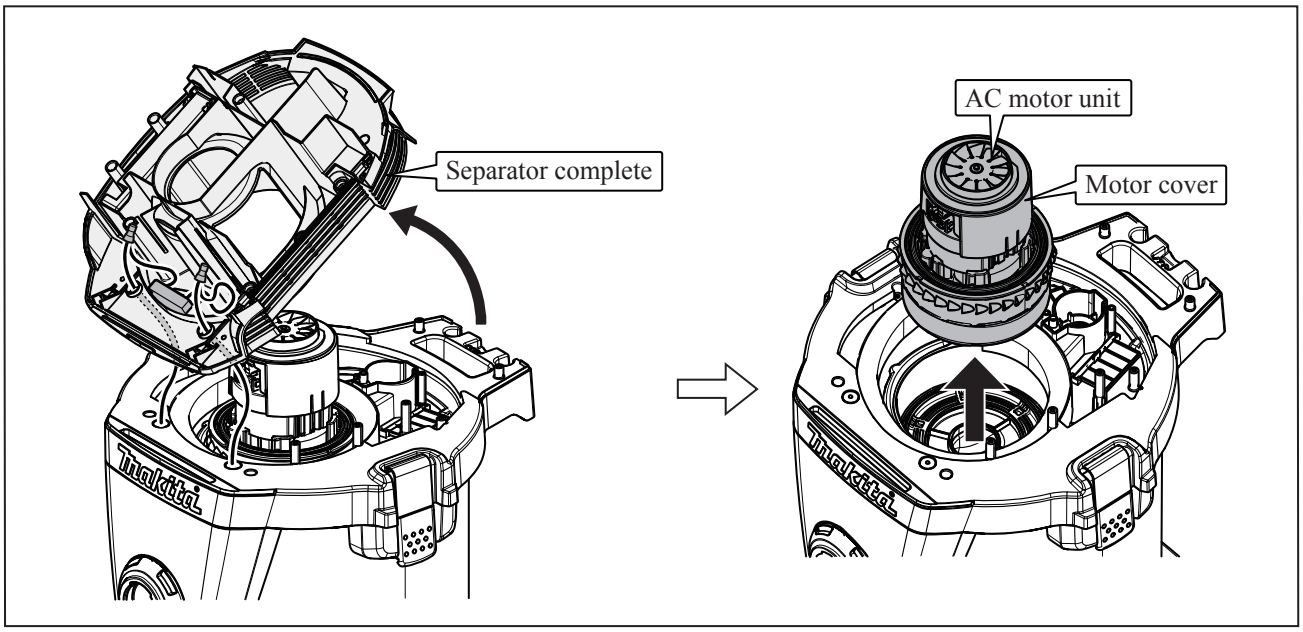

(9) Remove Motor cover from AC motor unit, then remove Fan 62 by turning it clockwise fast by hand.
If Fan 62 cannot be removed by hand, turn it by pushing the fan blade with a small slotted screwdriver as shown in **Fig. 9**.
Note: Be careful not to deform the fan blade with the screwdriver.

Fig. 9

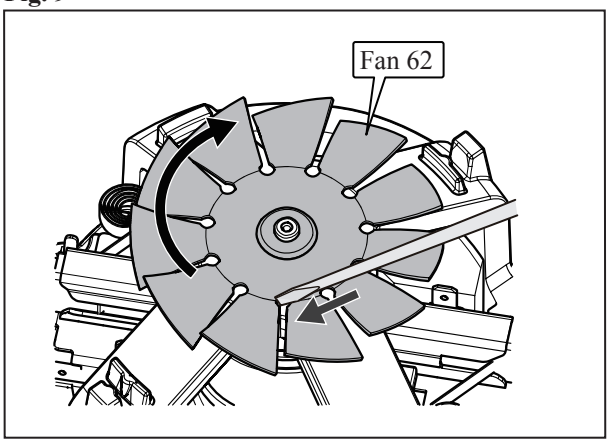

Repair

[3] DISASSEMBLY/ ASSEMBLY

[3]-1. Motor section (cont.)

DISASSEMBLING

(10) Disconnect Carbon brushes from the commutator of Armature assembly by moving the tail end of the spiral spring of each Brush holder as shown in **Fig. 10**.
Note: No need to remove Carbon brushes in this step.

(11) Unscrew M4x12 Pan head screw that fastens Brush holder to Endbell, then remove Receptacle terminal from the terminal of Brush holder, and then remove Brush holder together with Carbon brush.

(12) Remove Endbell and Field by unscrewing two M5x60 Pan head screws.

(13) Remove Fan cover from Return vane as follows; put a slotted screwdriver against Fan cover as shown in **Fig. 11**, then tap the screwdriver with a plastic hammer.

Fig. 10

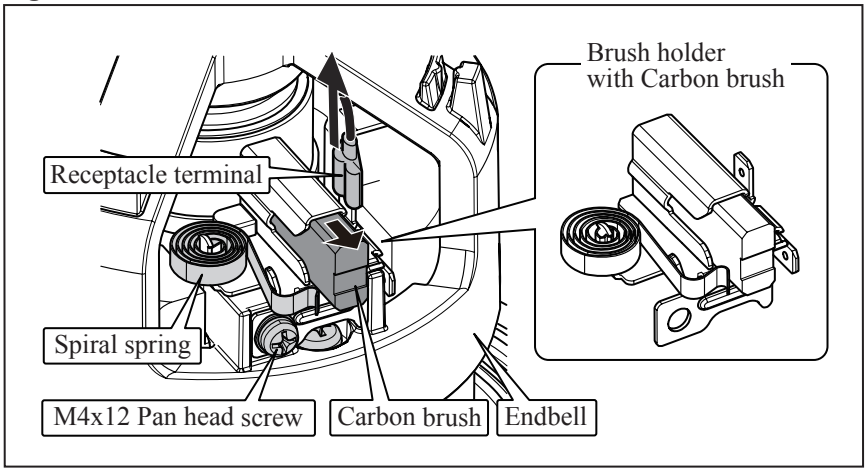

Fig. 11

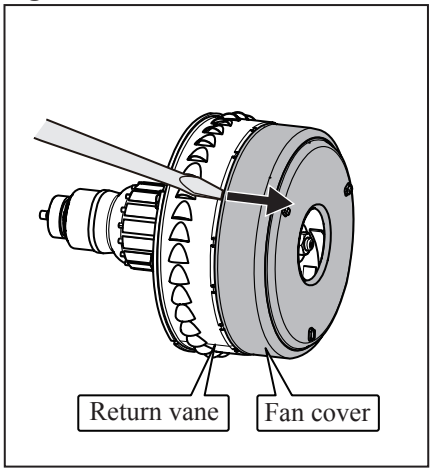

(14) Remove Fan 125 from Armature shaft as follows; hold Armature firmly with a gloved hand, then remove M8 Hex nut by turning counterclockwise with an impact driver.

(15) Remove Return vane from Base as follows; loosely tighten M8 Hex nut to Armature shaft so that Armature assembly cannot fall out of Base, then put a slotted screwdriver against Return vane as shown in **Fig. 12**, and then tap the screwdriver gently with a plastic hammer. Shown in **Fig. 13** is the exploded view of Return vane-Armature assembly section.

Fig. 12

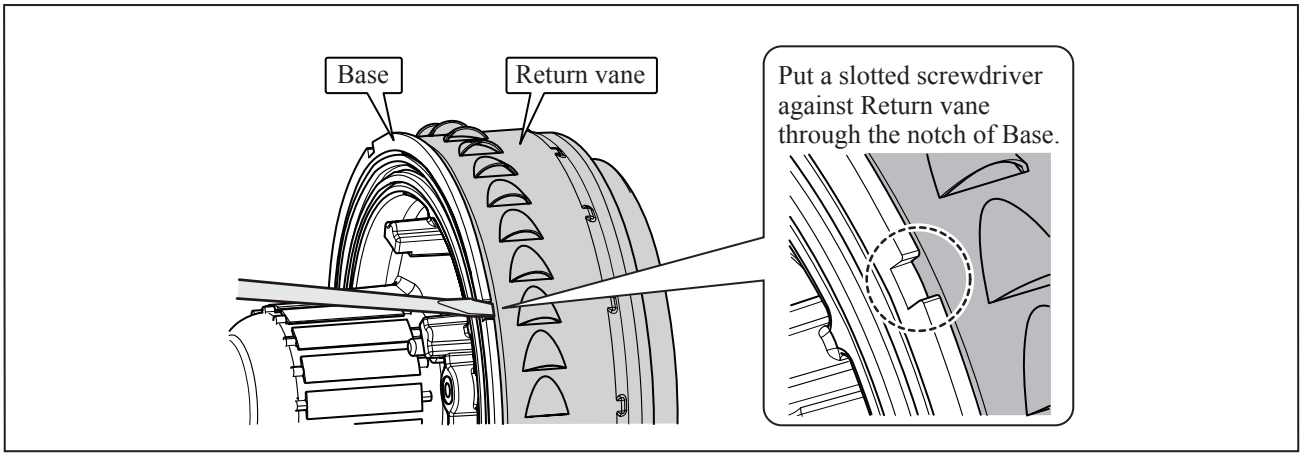

Fig. 13

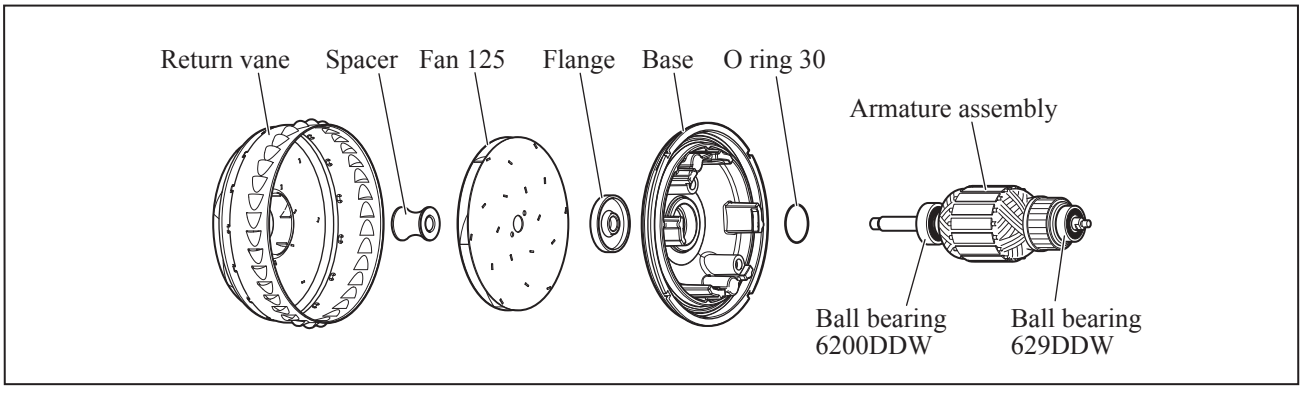

Repair

[3] DISASSEMBLY/ ASSEMBLY

[3]-1. Motor section (cont.)

ASSEMBLING

(1) Assemble the parts shown in **Fig. 14**.
Note: Loosely tighten M8 Hex nut to Armature shaft.

(2) Install Fan cover onto the assembly you made in step (1) as follows:
1. Put the assembly on 1R023 so that it stands on *the six protruding ribs of Base. (*See **Fig. 15**.)
2. Put Fan cover on the assembly.
3. Put 1R258 on Fan cover. (**Fig. 16**)
Note: Do not to put 1R258 on the three mating bosses of Base, or you will break them.
4. Using arbor press, press-fit Fan cover onto Return vane. (**Fig. 16**)

Fig. 14

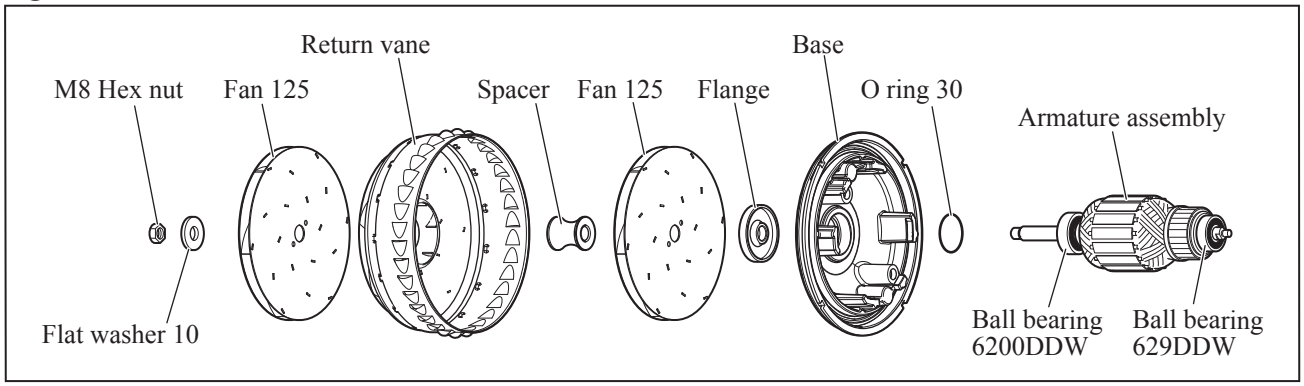

Fig. 15

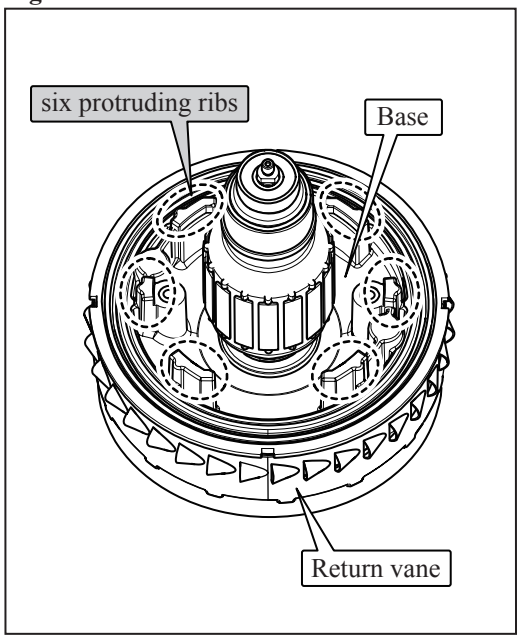

Fig. 16

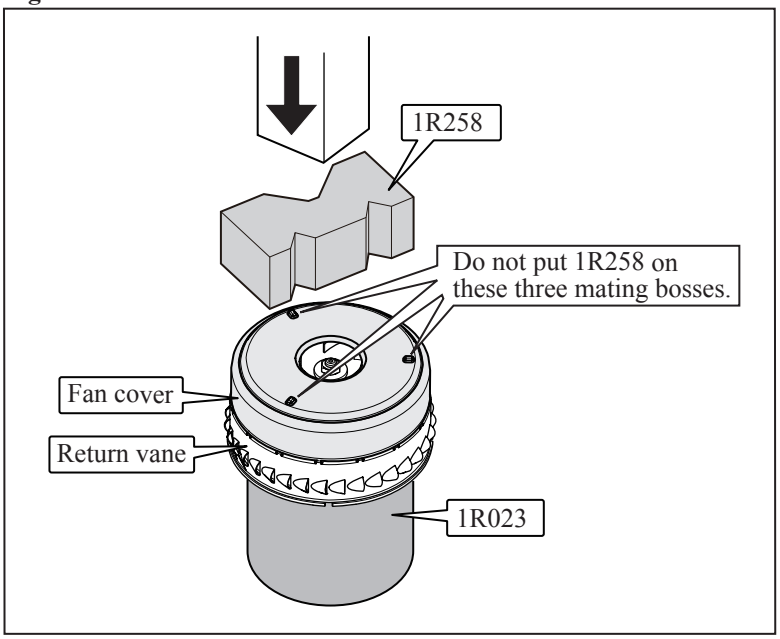

(3) Push Rubber ring 120 firmly into the groove of Base with the groove side up as shown in **Fig. 17**.
Note: When installing Separator complete in step (13) of "ASSEMBLING", be sure to apply ThreeBond 1215 in the groove of Rubber ring 120 without gap.

(4) Attach Field to Endbell.

Fig. 17

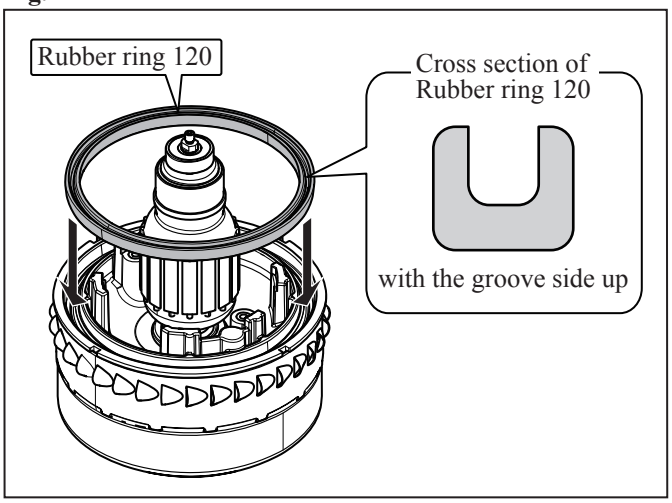

Repair

[3] DISASSEMBLY/ ASSEMBLY

[3]-1. Motor section (cont.)

ASSEMBLING

(5) Make sure that Wave washer 20 is placed in the bearing chamber of Endbell, insert Armature assembly into Endbell.

(6) While pressing the bearing chamber of Endbell straight down so that Wave washer 20 is approximately level, alternately tighten the two M5x60 Pan head screws with a manual screwdriver until they are seated. (**Fig. 18**) Then using 1R344, tighten the screws to a tightening torque of 1.3 to 1.5N.m.
Note: Brush holders can be now installed in place.

(7) Install Fan 62 onto Armature shaft as follows; place Fan 62 onto Armature shaft so that the crimped end of Fan bush is positioned on the opposite side of Endbell, then tighten Fan 62 hand-tight by turning it counterclockwise, and then tighten securely by pushing the fan blade with a small slotted screwdriver. (**Fig. 19**)
Note: Be careful not to deform the fan blade with the screwdriver.

(8) Install Seal ring 70 onto Motor cover, then mount Motor cover firmly over Endbell and Field.

Fig. 18

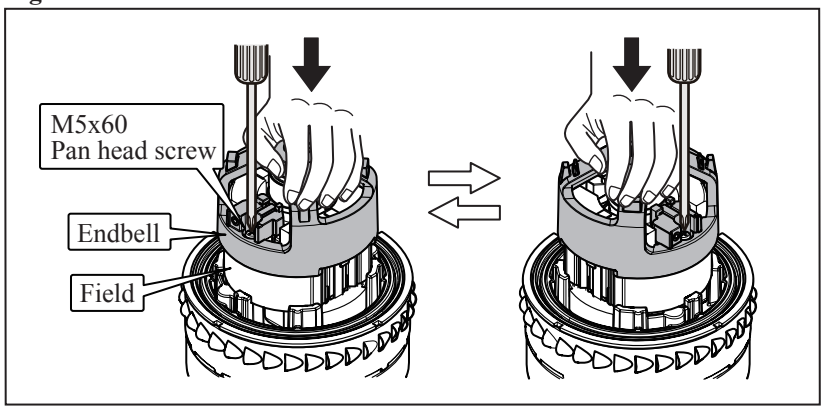

Fig. 19

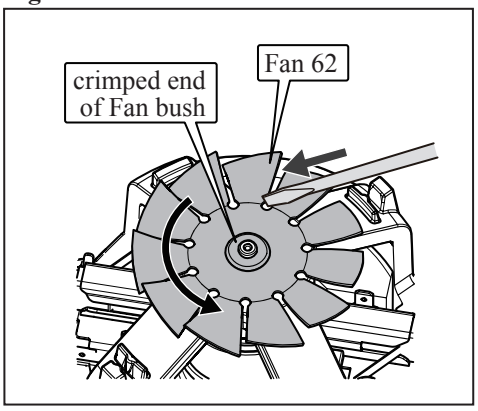

(9) Matching the three circular mating depressions of Support ring with the three circular mating bosses of Tank cover complete, mount Support ring into Tank cover complete. (**Fig. 20**)

(10) Matching the three mating bosses of Fan cover with three of the six mating depressions of Support ring, mount AC motor unit on Support ring. (**Fig. 21**)

Fig. 20

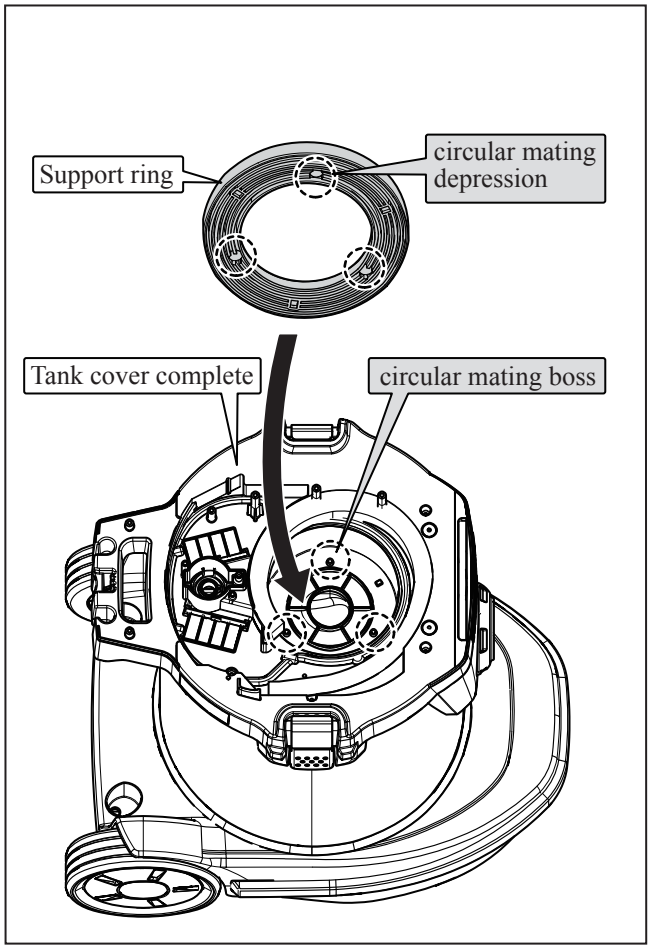

Fig. 21

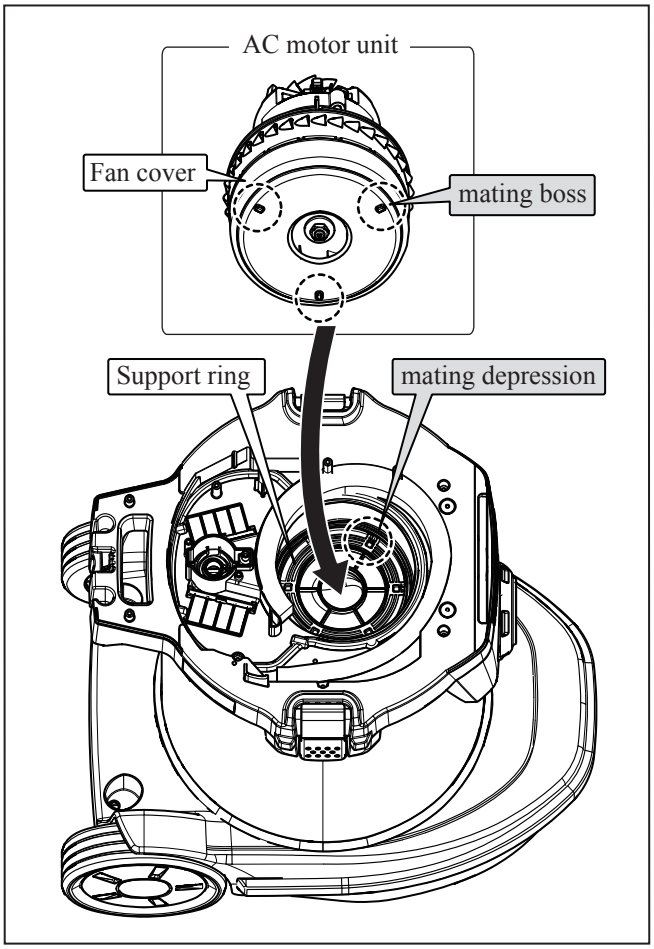

Repair

[3] DISASSEMBLY/ ASSEMBLY

[3]-1. Motor section (cont.)

ASSEMBLING

(11) Install two Outer valve completes in place as shown in **Fig. 22**.
Note: Be careful not to move them out of place when installing Separator complete in step (13) below.

(12) Assemble DC motor unit. [Refer to step (6) and **Fig. 6** of "DISASSEMBLING".]
Note: When installing DC motor on Gear case, insert the positioning pin of Gear case into the positioning hole of DC motor. (**Fig. 23**)

(13) Put Separator complete on Tank cover complete, then put DC motor unit in place; at this time, do not forget to engage the two flats of Spindle with those of Cam's hole.
Note: Do not forget to place DC motor seal between Separator complete on Tank cover complete.
Note: Apply Makita grease N.No.2 to the gear chamber of Gear case to prevent Spindle assembly from falling off from DC motor unit.

(14) Fasten Separator complete and DC motor unit to Tank cover complete with seven 4x35 Tapping screws, then insert Vinyl tube into place. [Refer to **Fig. 4** of "DISASSEMBLING".]

(15) Fit Switch base E-M complete in Cowling complete, then put Cowling complete over Separator complete; be sure to fit the top end of Switch base E-M complete in the groove inside Cowling complete to prevent Switch base E-M complete from falling out of place. (**Fig. 24**)
And then fasten Cowling complete to Separator complete with nine 4x35 Tapping screws.

Fig. 22

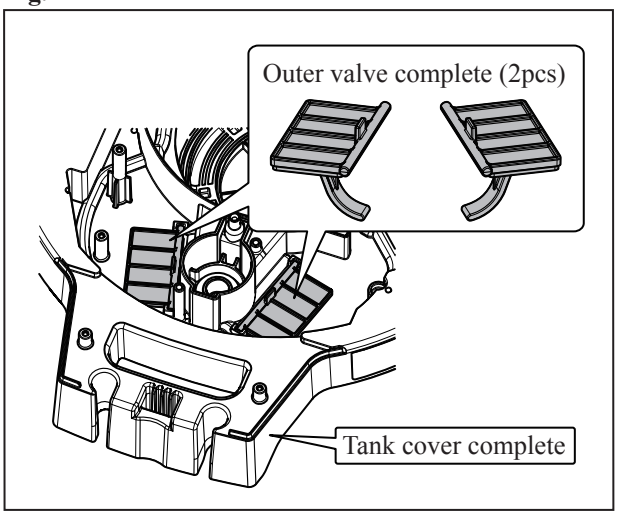

Fig. 23

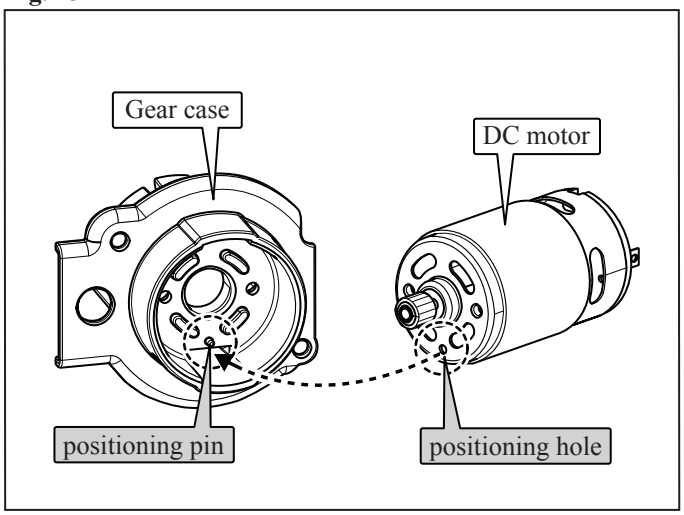

Fig. 24

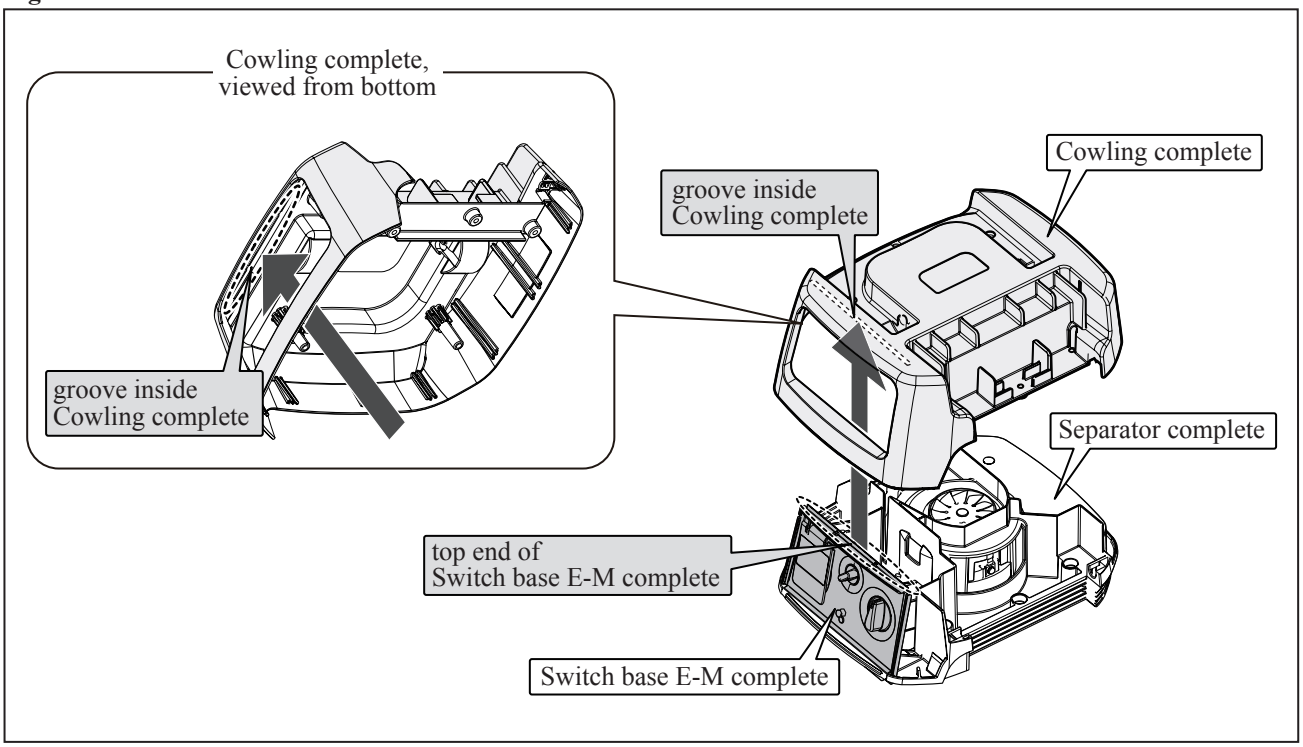

Repair

[3] DISASSEMBLY/ ASSEMBLY

[3]-2. Inner cover

DISASSEMBLING

(1) Turn the assembly of Inner cover and Tank cover complete upside down, then raise Lock lever to remove two Pre-filters. (**Fig. 25**)

(2) Remove eight 4x35 Tapping screws that fasten Inner cover to Tank cover complete. (**Fig. 26**)
Three of the eight screws are used also to fasten Protector to Inner cover. So, first pull off Terminal of two Lead units from Water level sensors of Protector, then remove Protector from Inner cover and then remove Inner cover from Tank cover complete. (**Fig. 27**) Rubber ring and Seal ring can now be removed from Tank cover.

(3) Remove two Inner valve completes, then remove Cam by removing Retaining ring S-20. (**Fig. 28**)

Fig. 25

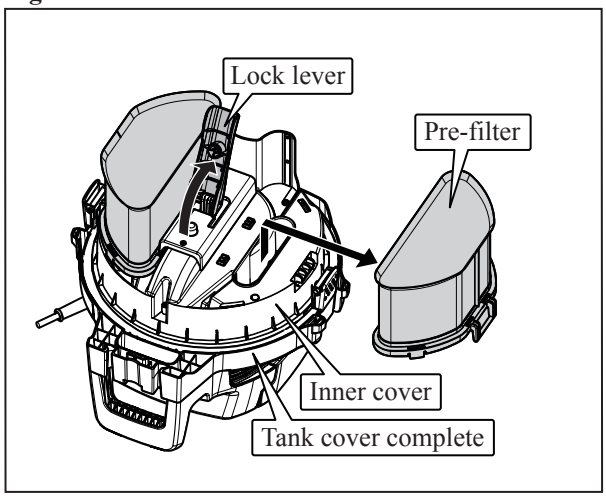

Fig. 26

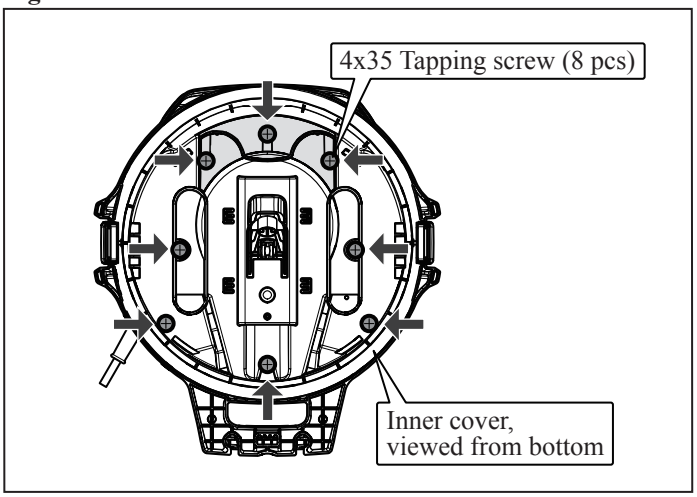

Fig. 27

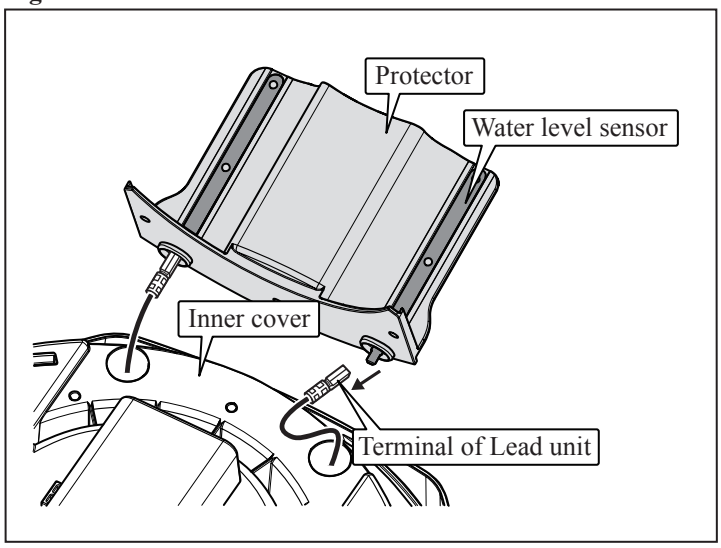

Fig. 28

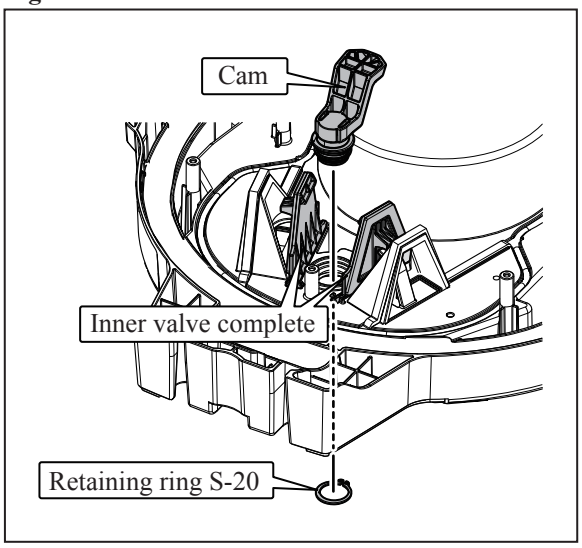

Repair

[3] DISASSEMBLY/ ASSEMBLY

[3]-2. Inner cover (cont.)

ASSEMBLING

Assemble by reversing the disassembly procedure.

Note:

- When installing Seal ring onto Tank cover complete, put the protruding portion of the ring in the depressed portion of Tank cover complete, then apply ThreeBond 1215 to the portion as shown on the left of **Fig. 29**.
- When installing Rubber ring onto Tank cover complete, fit the groove of the ring firmly over the fitting rib of Tank cover complete as shown on the right of **Fig. 29**.

Fig. 29

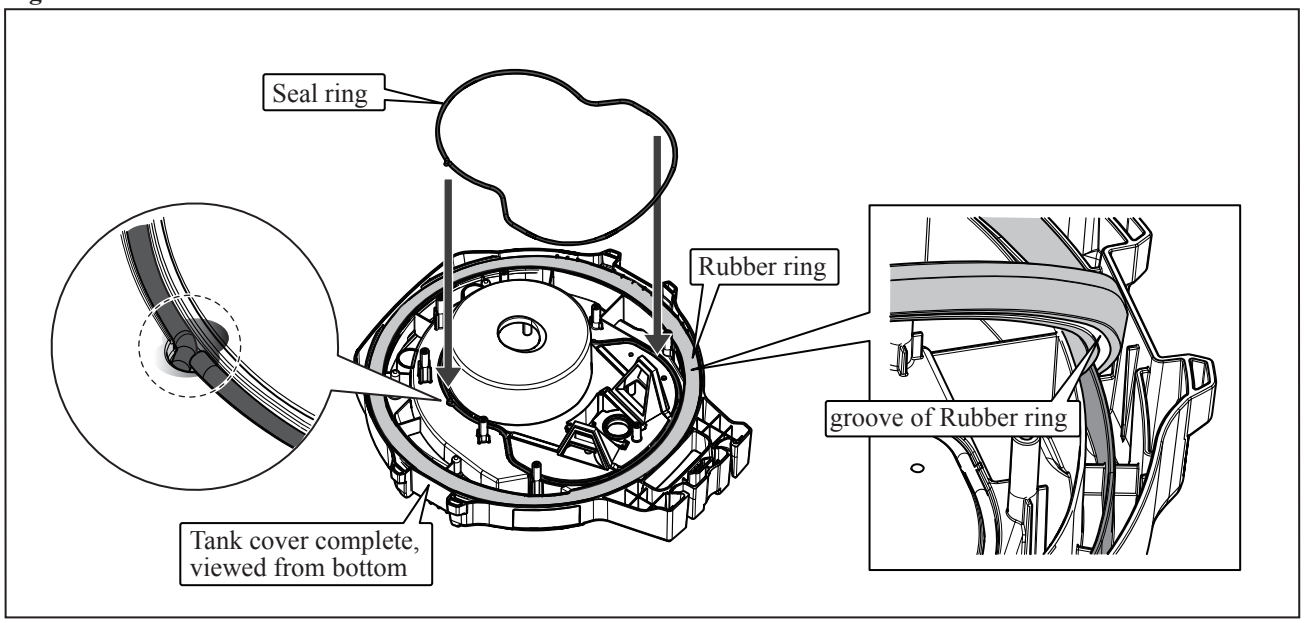

[3]-3. Grip

DISASSEMBLING

(1) Put Grip in the retracted position.
(2) Insert a slotted screwdriver between Grip and Cowling complete, then pry Grip in the direction of the white arrow to disengage the pivot pin of Grip from the hole of Cowling complete. (**Fig. 30**)
(3) While prying with the screwdriver, remove Grip by lifting it upwards.

ASSEMBLING

(1) Put the pivot pin of one end of Grip in the pivot hole on the rear side of Cowling complete.
(2) While prying the other end of Grip with a slotted screwdriver as you did in step (3) of "DISASSEMBLING", put the pivot pin in the pivot hole on the front side of Cowling complete.

Note: When prying Grip with a slotted screwdriver, be careful not to damage the surface of Grip or Cowling complete. An so it is highly recommended to wrap a rag around the screwdriver.

Fig. 30

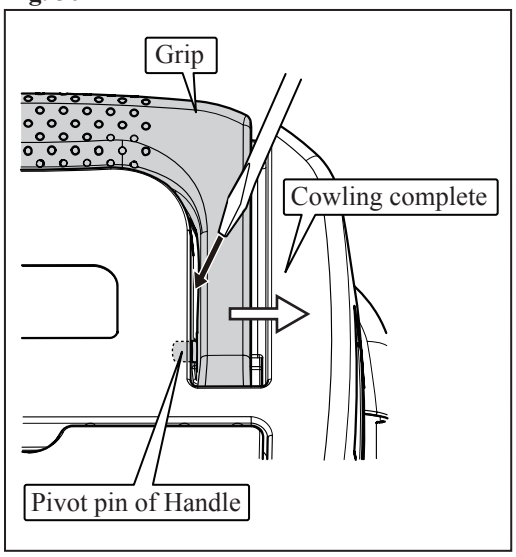

Repair

[3] DISASSEMBLY/ ASSEMBLY

[3]-4. Caster

Caster 75 (Front wheel)

DISASSEMBLING

(1) Turn the machine upside down.
(2) Apply a slotted screwdriver to the mating line of Tank and the metal stem of Caster 75, then hit the screwdriver to make a slit between them. (**Fig. 31**)
(3) Remove Caster 75 from Tank with two Bearing extractors (1R263) as follows:
  1. Insert the M-shaped end of two Bearing extractors (1R263) between the slit you made in step (2).
  2. Hold the metal stem of Caster 75 with the M-shaped end as shown in **Fig. 32**.
  3. Pry Caster 75 up and off from Tank.

ASSEMBLING

Assemble by reversing the disassembly procedure.

Note: If the metal stem is too tight to remove, replace the plastic portion only as shown in **Fig. 33**.

Fig. 31

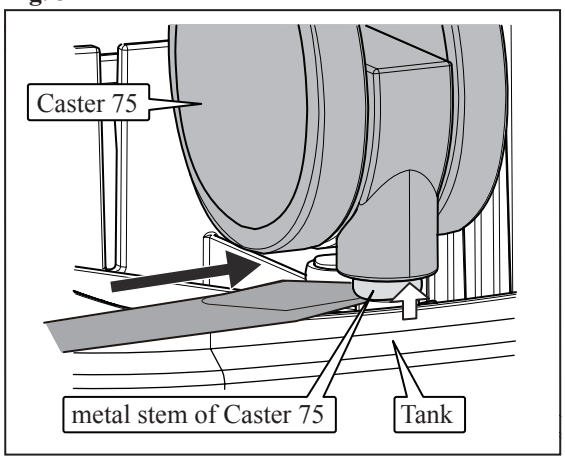

Fig. 32

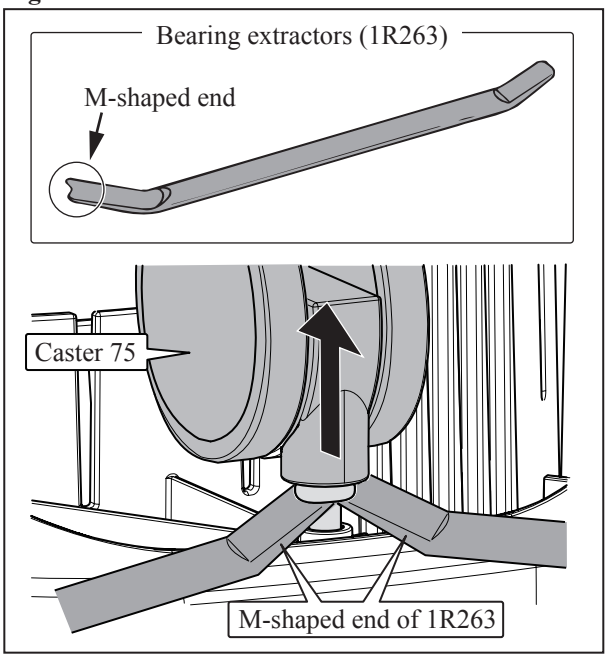

Fig. 33

Remove the metal stem from new Caster 75, then press-fit the plastic portion of new Caster 75 over the metal stem left sticking on Tank as follows:
1. Apply *grease to the metal stem.
2. Put 1R275 in the groove of the plastic portion of new Caster 75.
3. Hit 1R275 with a plastic hammer.

*You can use any kind of grease such as Makita grease N No.2.

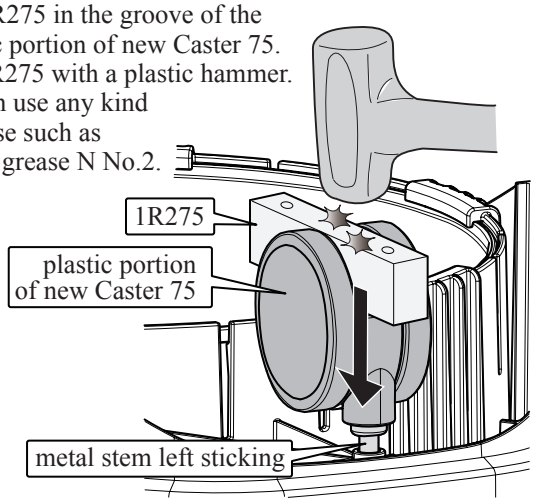

Caster 170 (Rear wheel)

DISASSEMBLING

(1) Pry Wheel cap off from Caster 170 with a slotted screwdriver. (**Fig. 34**)
(2) Using 1R291, remove Retaining ring S-20. (**Fig. 35**) Caster 170 can be now removed from Joint pipe 20-350.

ASSEMBLING

Assemble by reversing the disassembly procedure.

Fig. 34

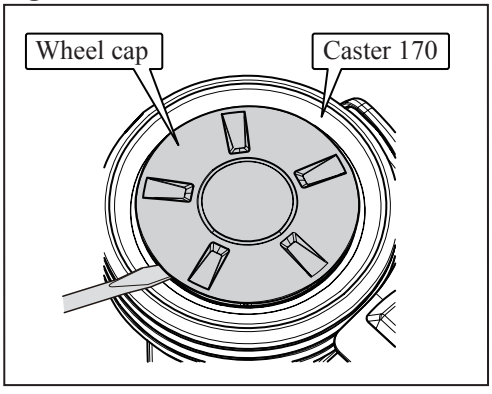

Fig. 35

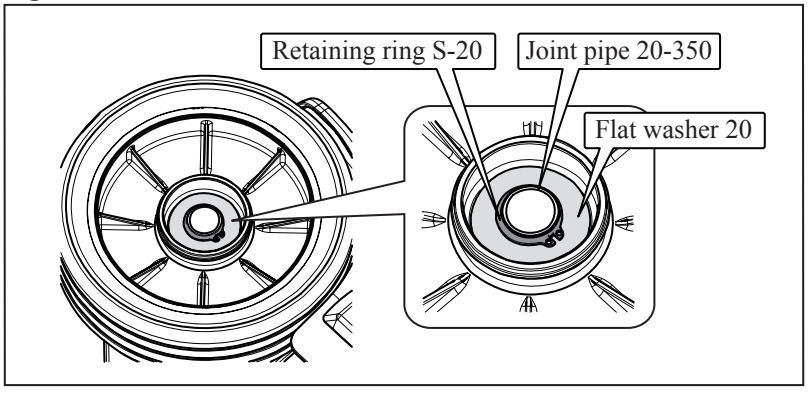

Repair

[3] DISASSEMBLY/ ASSEMBLY

[3]-5. Bumper

DISASSEMBLING

Pry Bumper off from Tank with a slotted screwdriver. (**Fig. 36**)

ASSEMBLING

Assemble by reversing the disassembly procedure.

Note: Make sure that there is no gap between Bumper and Base.

Fig. 36

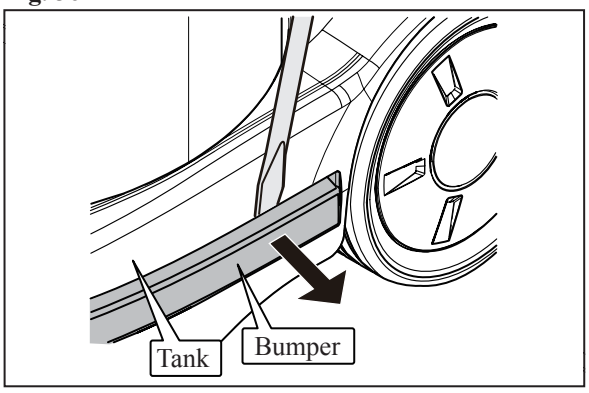

[3]-6. Inlet section

ASSEMBLING

Install the parts of Inlet section onto Tank as shown in **Fig. 37**.

Note: Make sure O ring 56 is installed on Holder before installing Inlet onto Holder.

Fig. 37

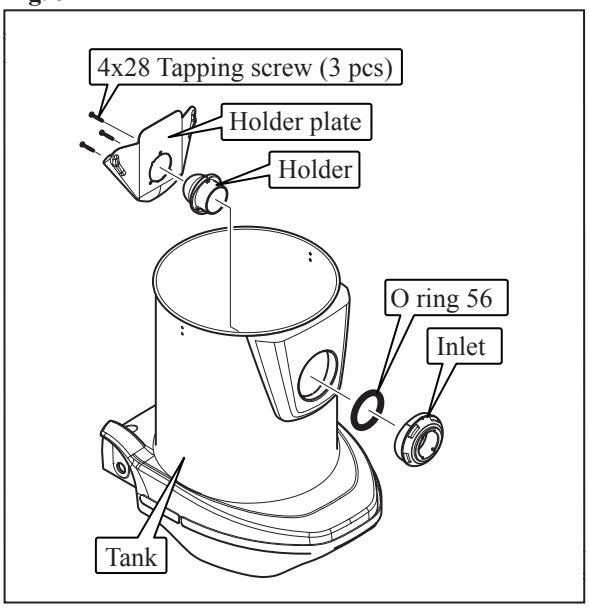

[3]-7. Checking automatic self-cleaning filter system

After repair is complete, be sure to check if the automatic self-cleaning system works properly as follows:

(1) Turn Motor section upside down and place it on a workbench as shown in **Fig. 38**.
(2) Switch on the machine.
(3) Make sure that two Filter units collapse then expand alternately every 10 seconds.

Fig. 38

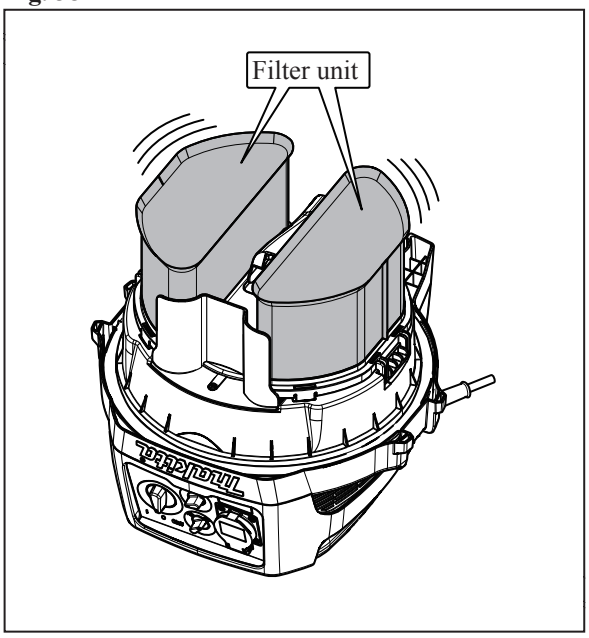

Circuit diagram

Fig. D-01

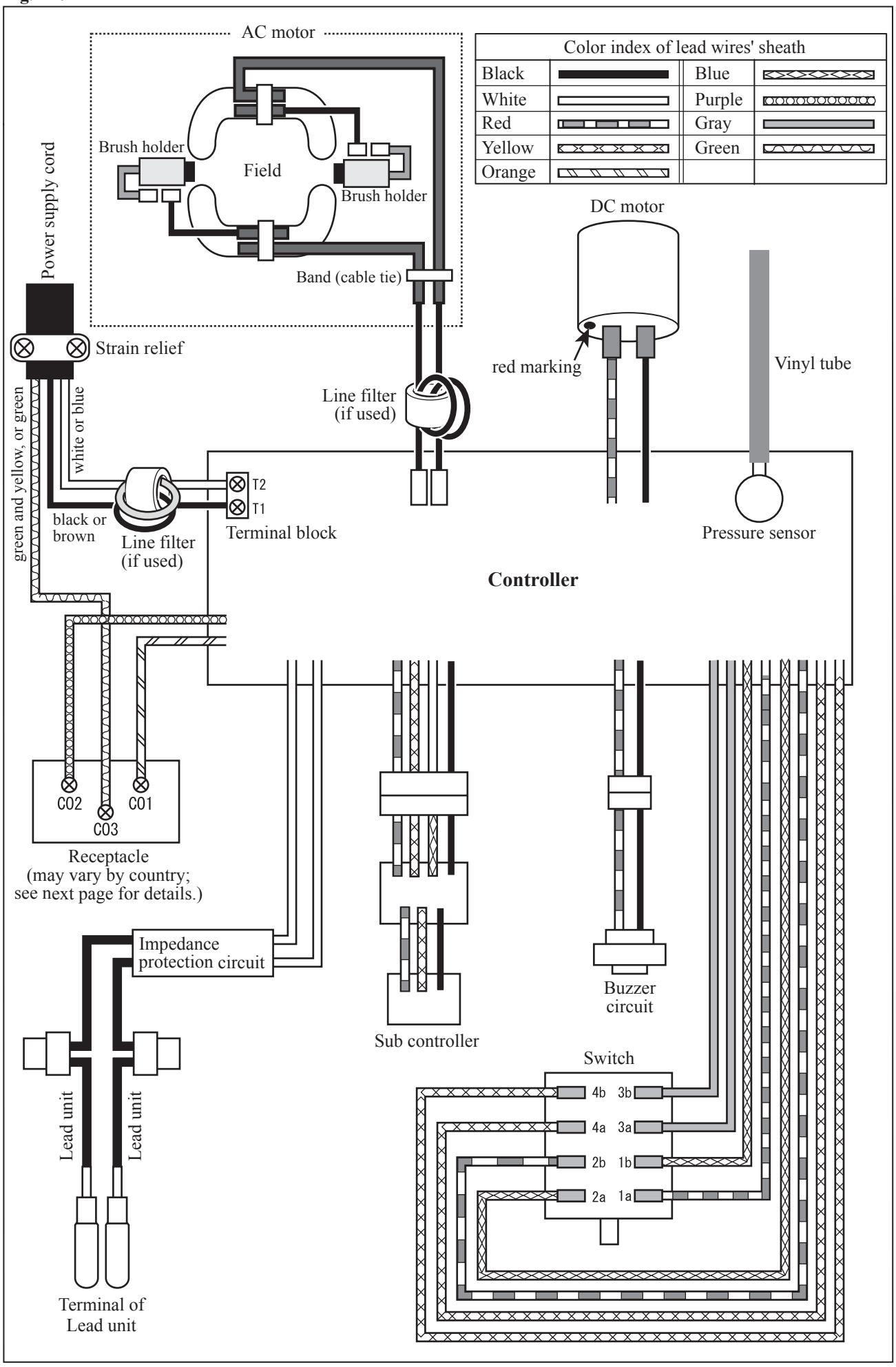

Circuit diagram

Fig. D-02

Country	Receptacle		
	Part No.	Front view	Back view showing where Terminals C1, C2 and C3 are located
European countries, etc.	655117-0	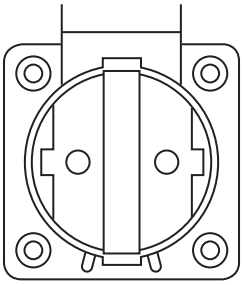	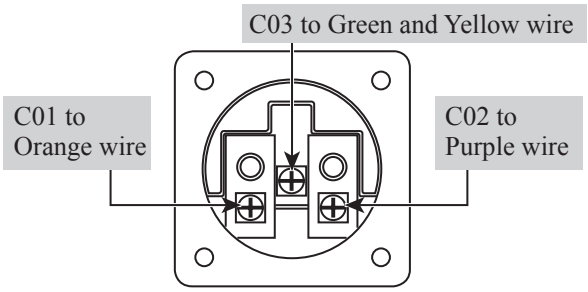
UK (240V)	655118-8	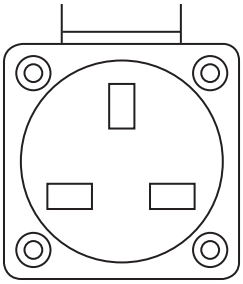	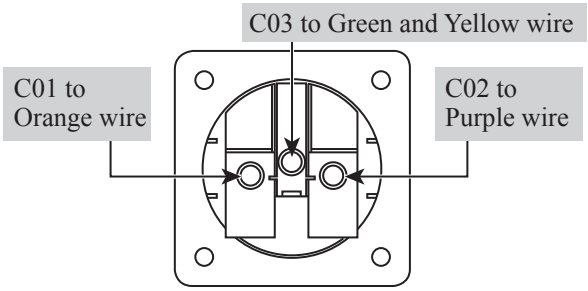
UK (110V)	655119-6	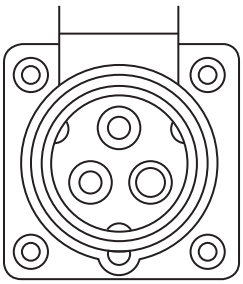	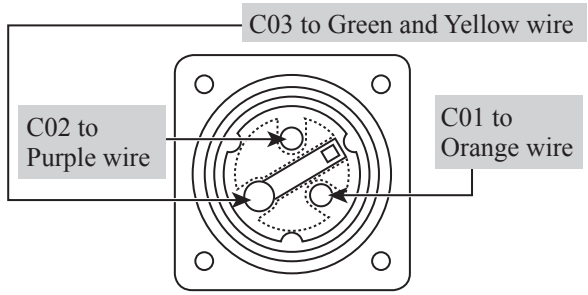
Brazil	655120-1	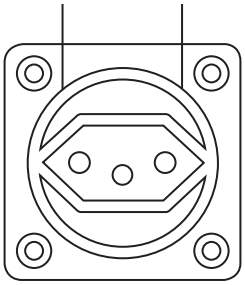	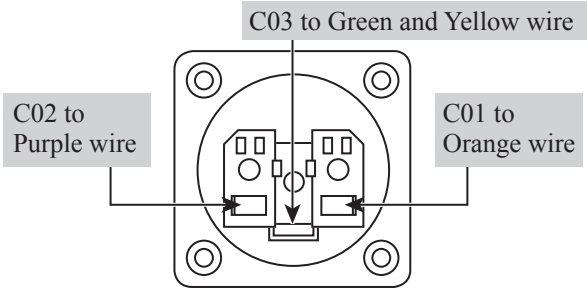
Australia, etc.	655121-9	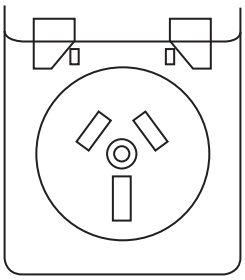	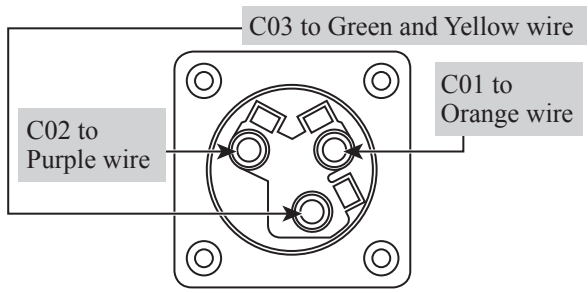
Argentina	655122-7	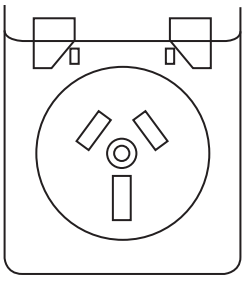	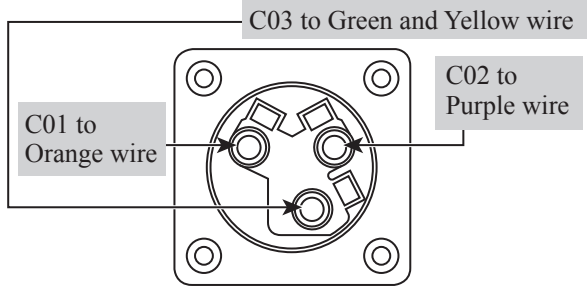

Wiring diagram

1. AC motor unit

Fig. D-03

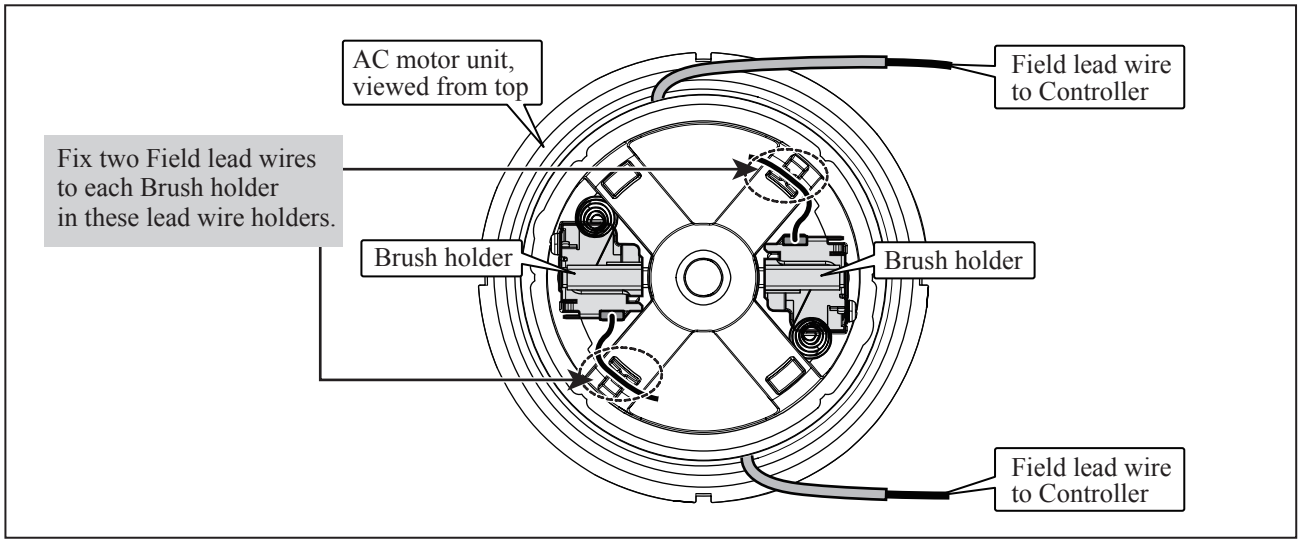

Fig. D-04

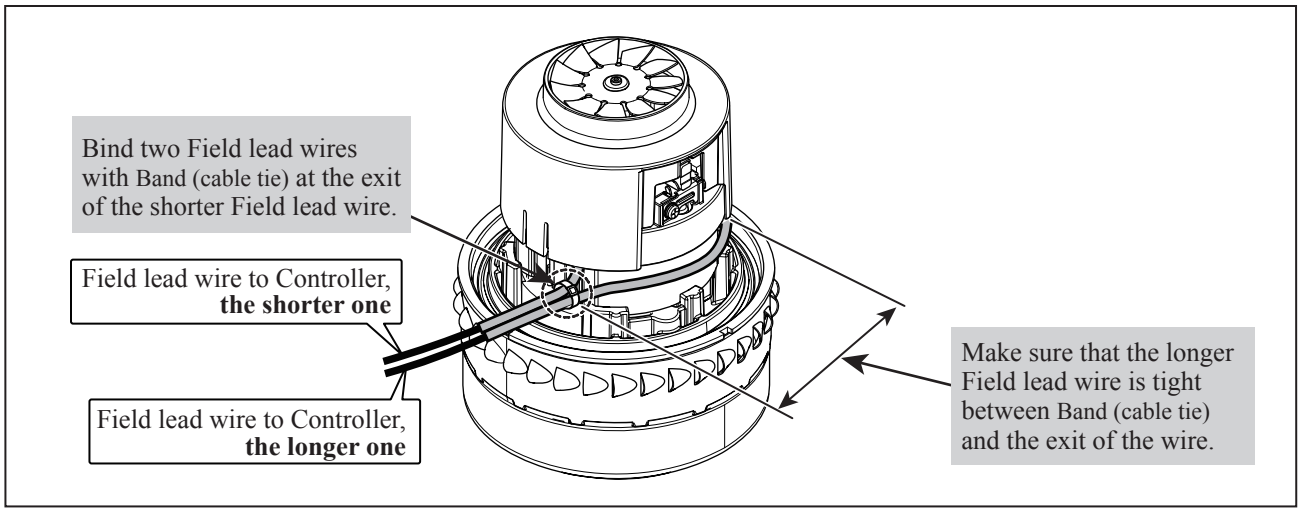

Fig. D-05

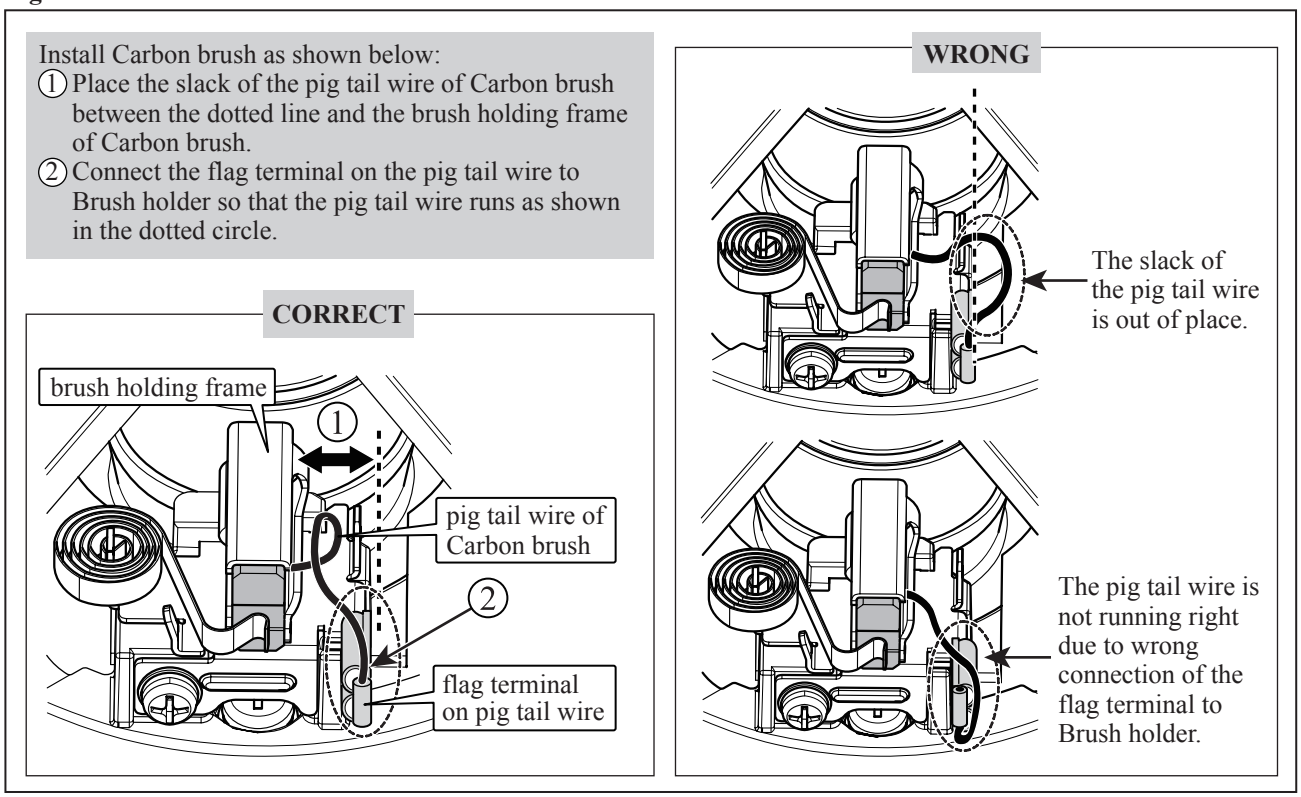

Wiring diagram

1. AC motor unit (cont.)

Fig. D-06

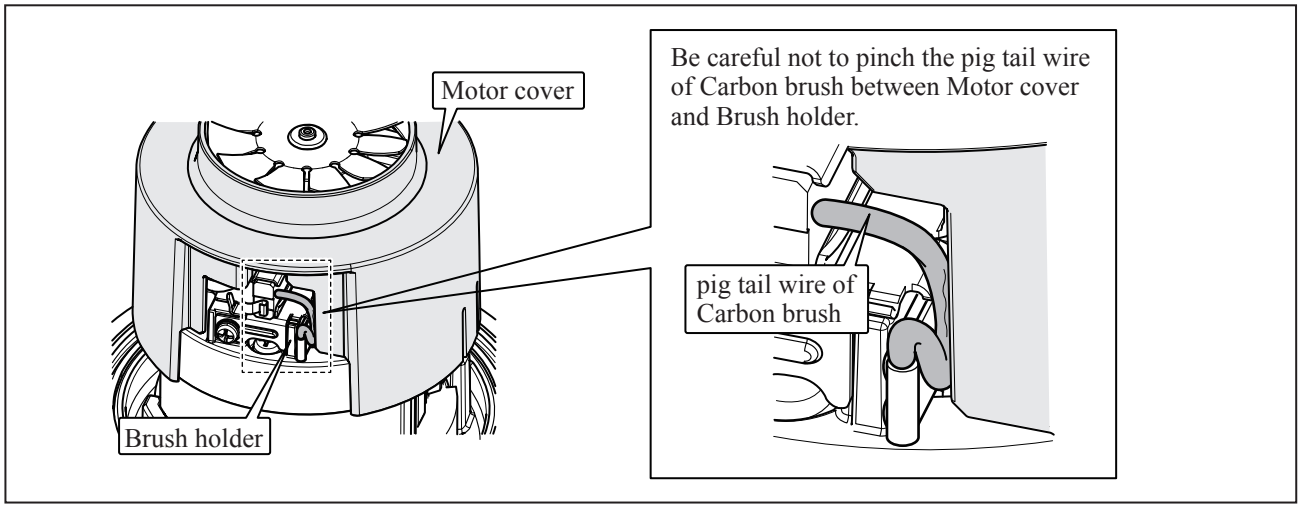

Fig. D-07

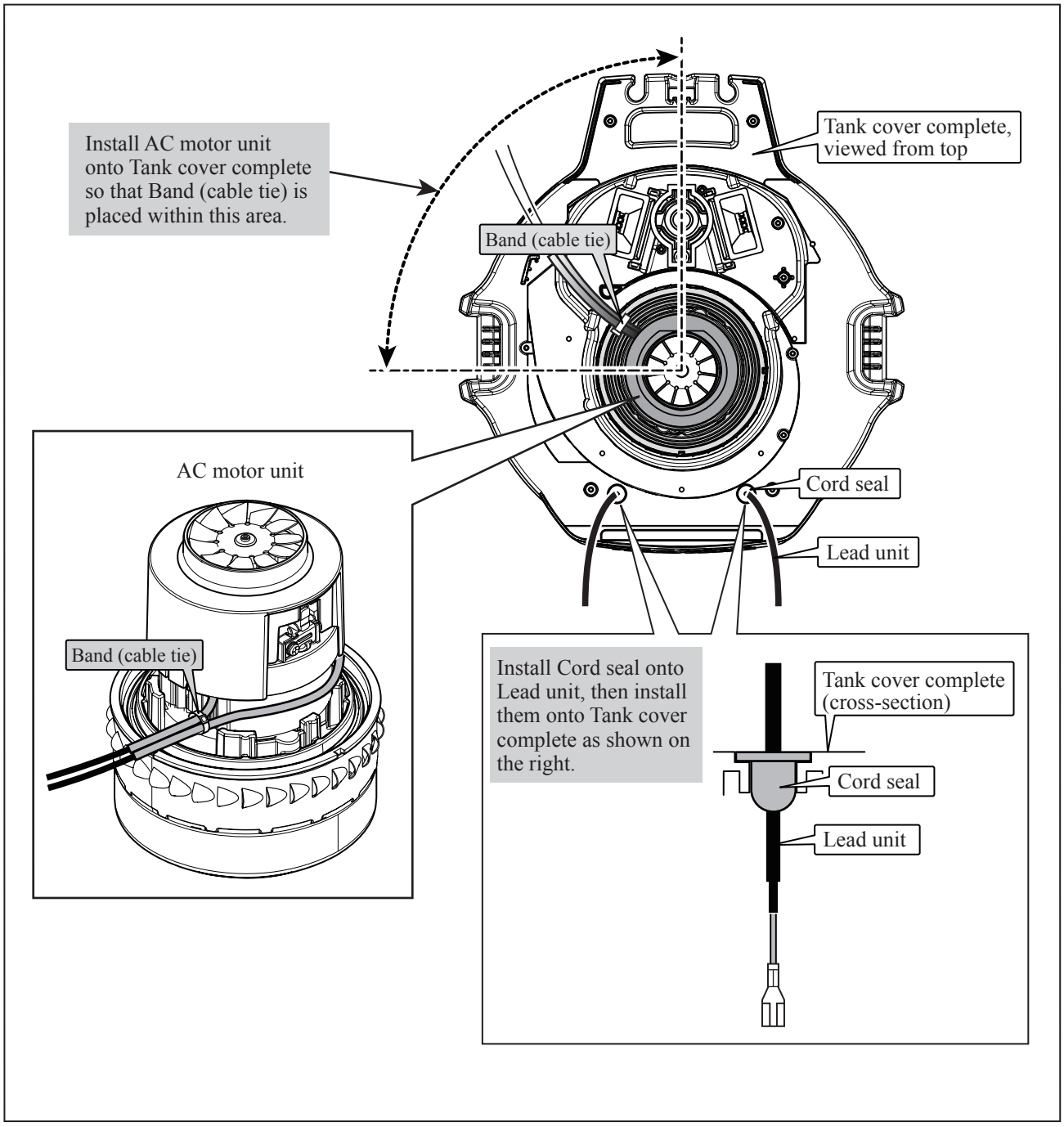

Wiring diagram

2. Wiring in Separator complete

Fig. D-08

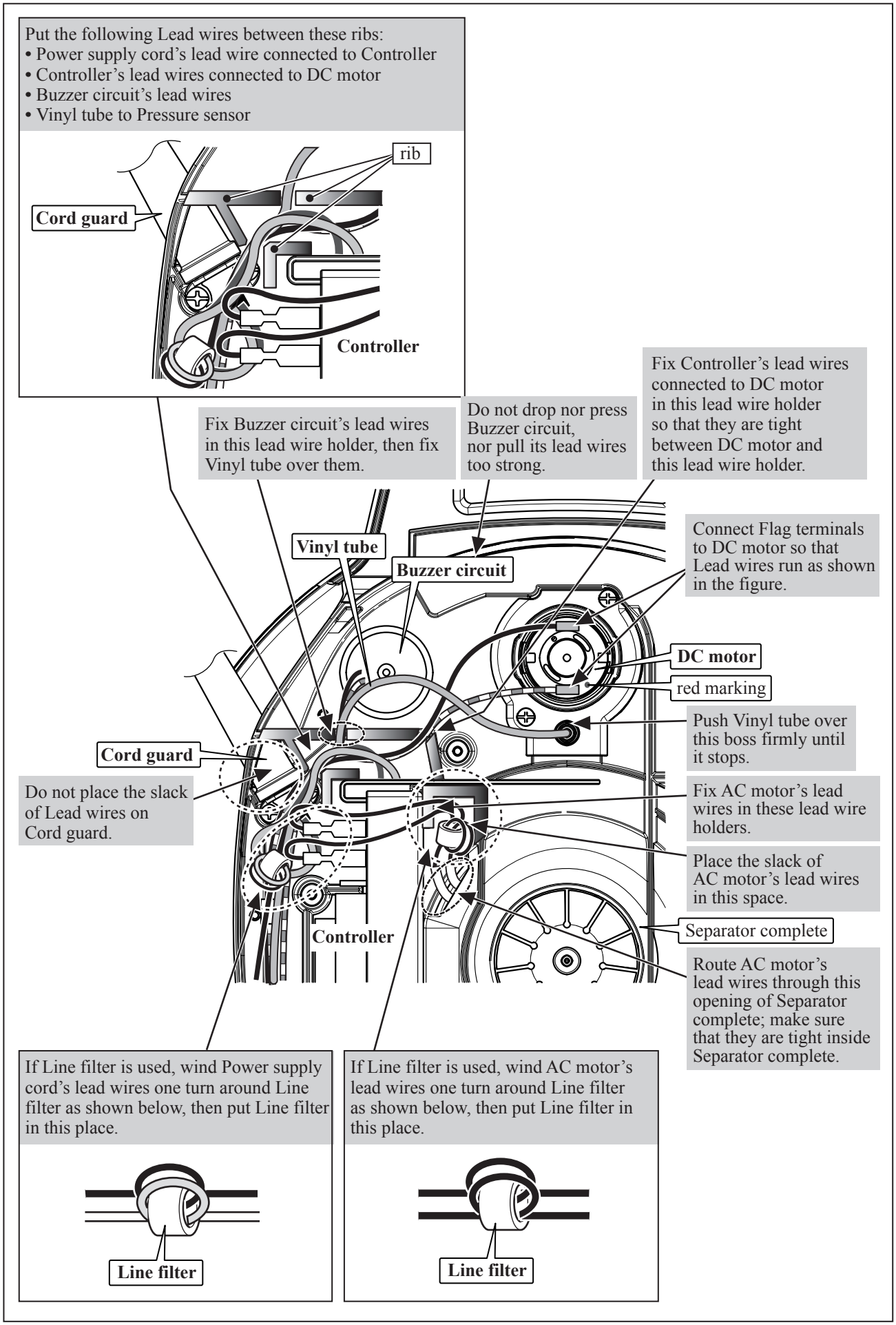

Wiring diagram

2. Wiring in Separator complete
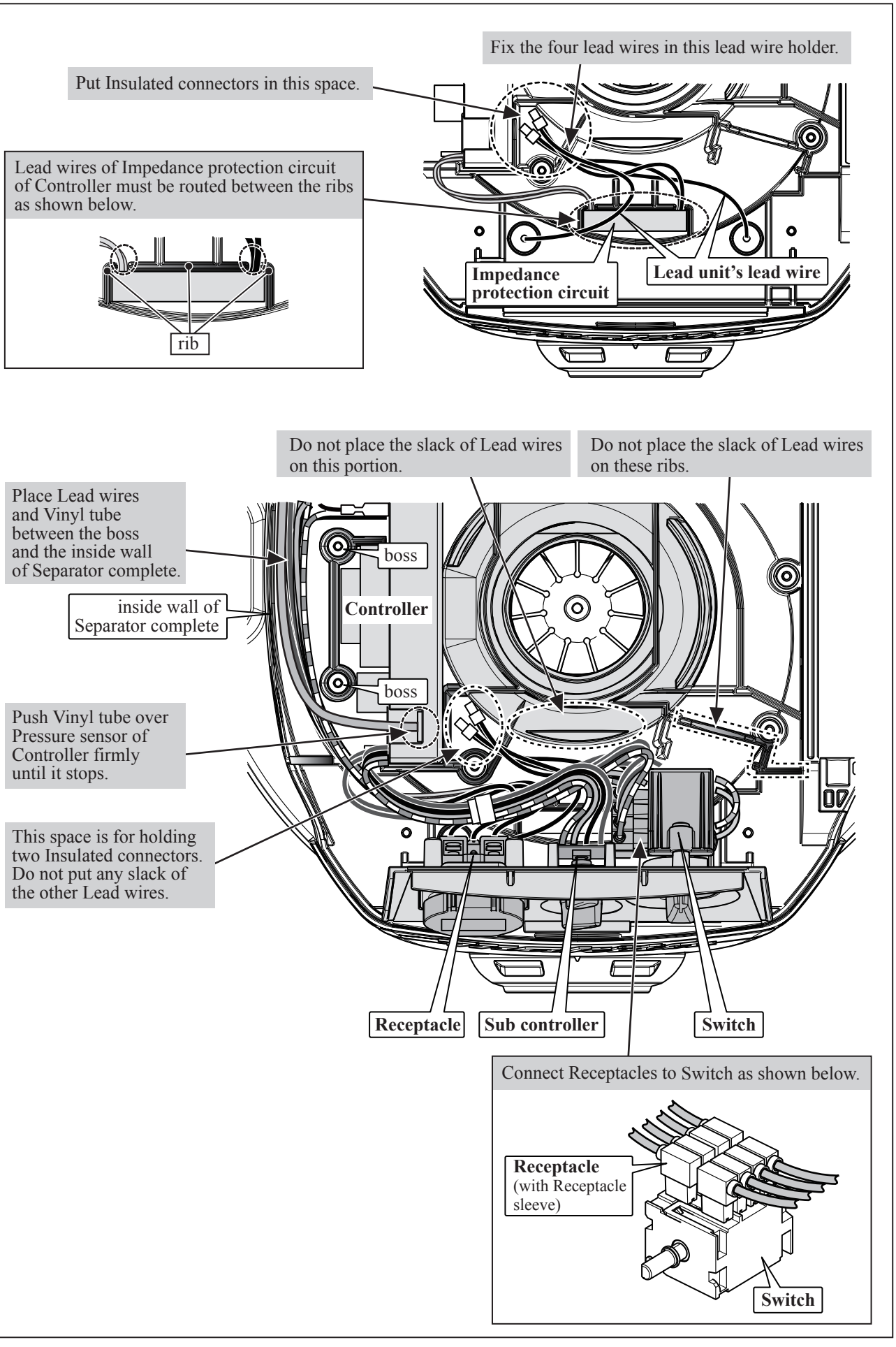
Fig. D-09