TECHNICAL INFORMATION

Model No. ► UC3030A/ UC3530A/ UC4030A/ UC4530A

Description ► Chain Saws 300mm(12")/ 350mm(14")/ 400mm(16")/ 450mm (18")

CONCEPT AND MAIN APPLICATIONS

These electric chain saws have been developed as the up-graded successors to the current UC3003A series models.
Designed with the concept of "Easy Operation and Maintenance", and feature the following main advantages;

- Toolless blade change and adjustment
- Handles with soft grip for more comfort and control

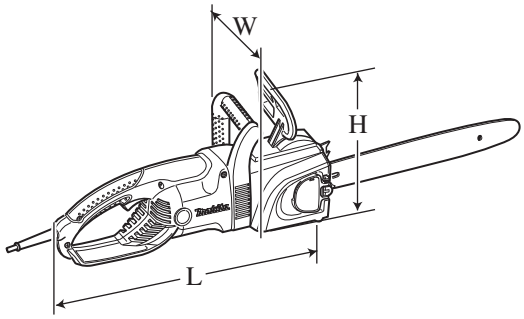

*Dimensions: mm (")	
Length (L)	492 (19-3/8)
Width (W)	201 (7-7/8)
Height (H)	220 (8-5/8)

*Dimensions: excludes guide bar.

► Specification

Voltage (V)	Current (A)	Cycle (Hz)	Continuous Rating (W)		Max. Output (W)
			Input	Output	
110	15	50/ 60	1,570	900	1,800
120	14.5	50/ 60	1,650	900	1,800
220	8.6	50/ 60	1,800	1,000	2,200
230	9.2	50/ 60	2,000	1,100	2,200
240	8.8	50/ 60	2,000	1,100	2,200

Model No.		UC3030A	UC3530A	UC4030A	UC4530A
Chain speed per sec: m/s (m/min) [ft/min]		13.3 (800) [2,600]			
Standard guide bar	Type	DOUBLE GUARD: 91VG			
	Size: mm (")	300 (12)	350 (14)	400 (16)	450 (18)
Chain blade	Type	91VG-46E	91VG-52E	91VG-56E	91VG-62E
	Pitch	3/8"			
Chain brake		Electric brake			
Chain oil tank capacity: ml		140			
Automatic chain oiling		Yes			
Double insulation		Yes			
Power supply cord: m (ft)		UK: 10 (32.8) European countries other than UK: 5 (16.4) Other countries: 0.3 (0.98)			
Net weight: kg (lbs)		4.4 (9.7) [without guide bar and chain blade]			

► Standard equipment

Chain blade ..... 1 pc
Guide bar ..... 1 pc
Guide bar cover ..... 1 pc
Hook complete ..... 1 pc

Note: The standard equipment for the tool shown above may differ by country.

► Optional accessories

Chain blade (91VG) (300/ 350/ 400/ 450mm)
Guide bar (DOUBLE GUARD: 91VG) (300/ 350/ 400/ 450mm)
Chain oil

Repair

CAUTION: Remove the chain blade, guide bar from the machine for safety before repair/ maintenance ! Make sure that chain oil is removed from oil tank !

[1] NECESSARY REPAIRING TOOLS

Code No.	Description	Use for
1R005	Retaining ring pliers RT-2N	Removing Compression spring 9
1R033	Bearing setting plate 10.2	Repairing Push nut
1R263	Bearing extractor (2 pcs)	Removing Bearing housing
1R269	Bearing extractor	Removing Bearings

[2] LUBRICATION

1) Put 4g of Makita grease N.No.1 in Gear portion.
2) When replacing Oil pump, apply a little amount of Chain oil to Pin portion of Crank.
3) Apply a little amount of Makita grease N.No.1 to the circumference of Cam.
4) Apply a little amount of Makita grease N.No.1 to the gear used for toolless blade tension adjustment.

[3] DISASSEMBLY/ASSEMBLY

[3] -1. Maintenance of Oil Supply Port

If Chain oil is not supplied to chain or delivered very little;

1) Remove Guide bar from the machine. Remove Push nut 8 from Oil supply port as illustrated in **Fig. 1**: the teeth of Push nut 8 will be closed to some extent at this time. Remove Filter (of felt) from Oil supply port, and run the machine. If Chain oil flows out from Oil supply port, there is not trouble with Oil pump.
The malfunction is caused by clogged Filter in this case. Clean up Filter with kerosene, and set Filter and Push nut 8 in place.
Note:
Removed Push nut 8 can be reused by respreading the closed teeth using hammer and 1R033. (**Fig. 2**)
Replace Push nut 8 with new one if any one of the teeth is broken or badly deformed.

Fig. 1

Push nut 8 can be removed by:
A) Levering up with a thin screwdriver, or
B) Lightly pushing in with a Phillips screwdriver.

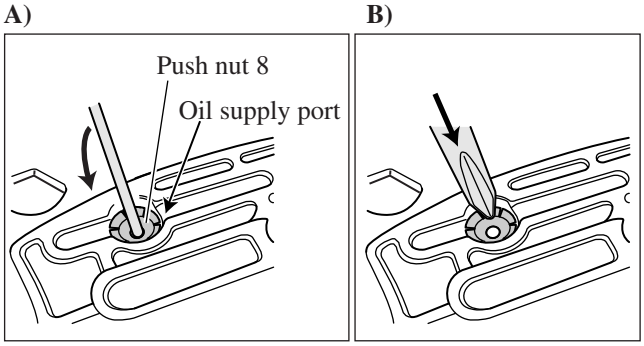

Fig. 2

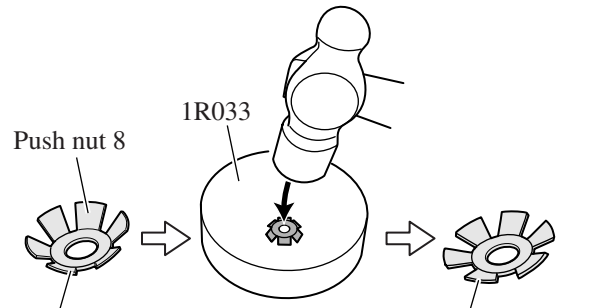

2) If Chain oil does not flow out although Filter is cleaned up, disassemble Lubricating mechanism (See **[3] -2** on page 3.), and check whether the following parts are clogged with foreign matter: Filter in Oil tank, Oil tube, Oil pump.
If clogged, remove foreign matter and clean up the part(s) with kerosene. Run the machine, and check whether Chain oil flows out.
3) If Chain oil still does not flow out, the malfunction is caused by broken Oil pump. Replace Oil pump complete with new one.

Repair

[3] -2. Lubricating Mechanism, Front Hand Guard

DISASSEMBLING

1) Remove Sprocket cover.
2) Remove six Screws that fasten Spike bumper and Front handle. (**Fig. 3**)
3) Turn the machine upside down. Remove Front handle while pulling in the direction of the arrow. (**Fig. 4**)
4) Remove Tank cap and Cover.
5) Pull out Tube, and remove Oil pump.
6) Remove Compression spring 6 and Front hand guard. (**Fig. 5**)
   Note: Be sure to remove Compression spring 6 before removing Front hand guard so that Compression spring 6 cannot fly away.

ASSEMBLING

Do the reverse of the disassembling steps.
Note: When installing Front hand guard, fit the protrusion on Front guard in the concave portion on Rod. (**Fig. 6**)

Fig. 3

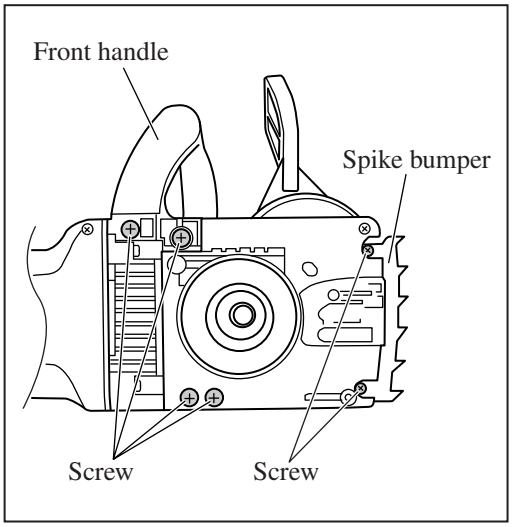

Fig. 4

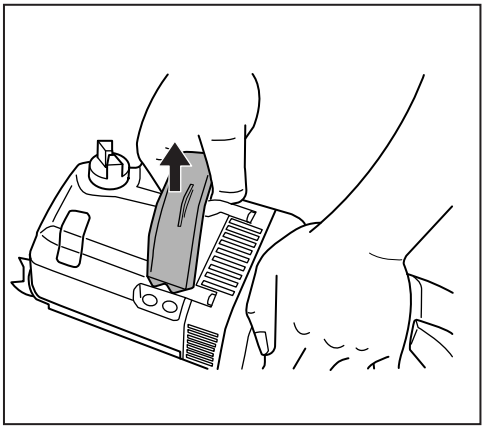

Fig. 5

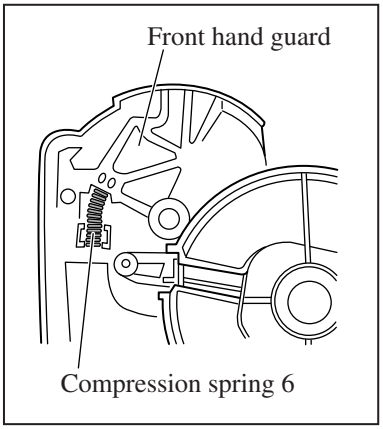

Fig. 6

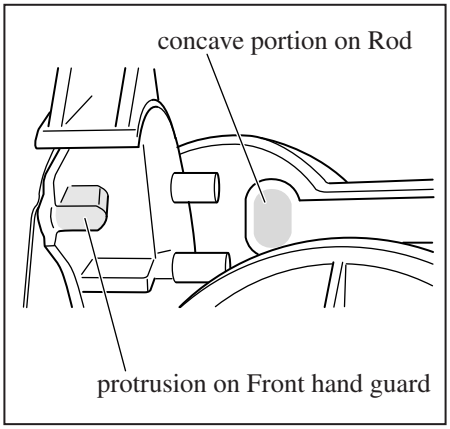

[3] -3. Armature, Crank, Straight Bevel Gears 14 and 43

DISASSEMBLING

1) Remove Carbon brushes.
2) Remove up to Front handle.
   [Follow the steps 1), 2), 3) of **[3] -2**.]
3) Remove Tank cap, and unscrew four screws that fasten Motor housing and Housing with a long Phillips screwdriver (**Fig. 7**)
4) Pull off Motor housing, and take out Armature. Straight bevel gear 14 can be easily removed by hand.
   Note: Be careful not to drop Straight bevel gear 14 down on work bench, floor or your foot.

Fig. 7

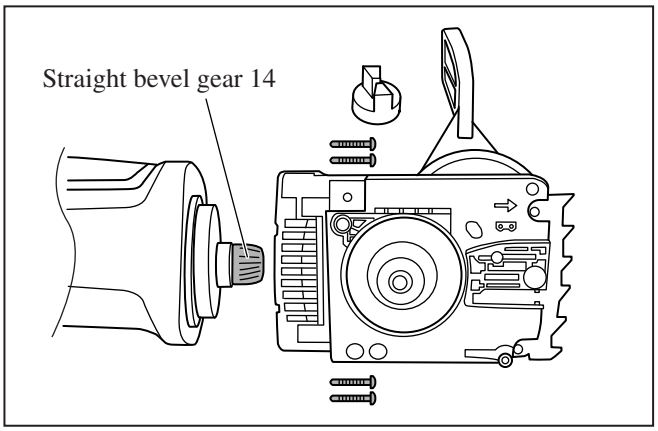

Repair

[3] -3. Armature, Crank, Straight Bevel Gears 14 and 43 (cont.)

5) Lever off Bearing housing using two 1R263 or slotted screwdrivers. (**Fig. 8**)
6) Remove Ball bearing 606ZZ and Cam using 1R269. By removing E ring 10, Straight bevel gear 43 can be removed. (**Fig. 9**) Crank of Oil pump can be removed from this side.

ASSEMBLING

Do the reverse of the disassembling steps.
Note: Place the loop portion of Crank in the center of Bearing room so that Cam is positioned inside the loop portion of Crank when Straight bevel gear 43 and Cam are assembled to the machine. (**Fig. 10**)

Fig. 8

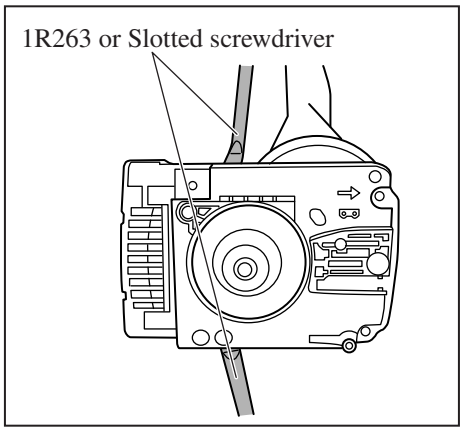

Fig. 9

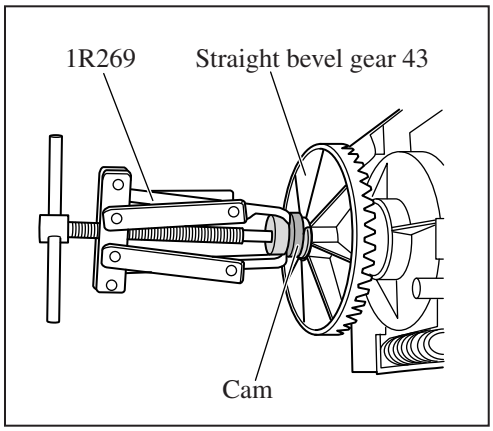

Fig. 10

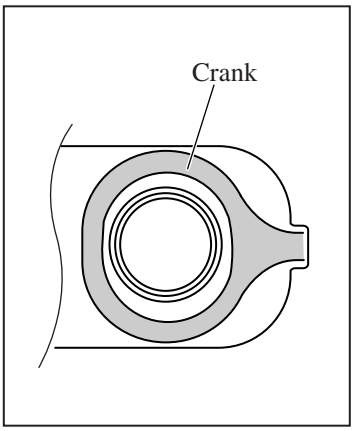

[3] -4. Kickback Brake Section Including Brake Drum (Sprocket)

DISASSEMBLING

1) If Front hand guard is broken, replace with new one while referring to **[3] -2**.
2) Turn the kickback brake off by pulling Front hand guard towards Rear handle.
3) Remove Brake drum assembly (Sprocket) by removing E ring 6. (**Fig. 11**)
Note: Flat washer 8 is also removed in this step. Be careful not to lose it.
4) Turn the kickback brake on by pushing Front hand guard towards Guide bar.
5) Remove Front handle guard by unscrewing six Screws. (**Fig. 3** in page 3)
6) Remove Bearing housing as illustrated in **Fig. 8**.
Note: Bearing housing can be removed without removing Straight bevel gear 43, Spindle and Motor housing.
7) Remove Link plate complete, Brake band and Compression spring 9.
Important: The kickback brake must be on when these three parts are removed.
If the kickback brake is not yet on, turn it on by bending Link plate complete with water pump pliers. (**Fig. 12**)

Fig. 11

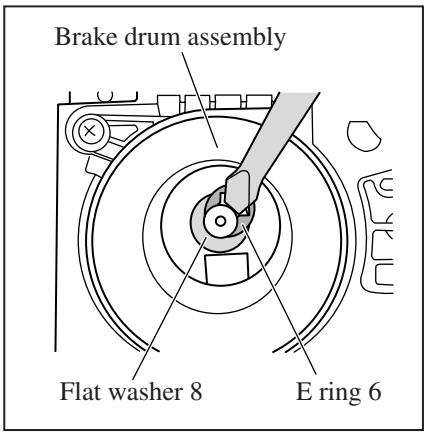

Fig. 12

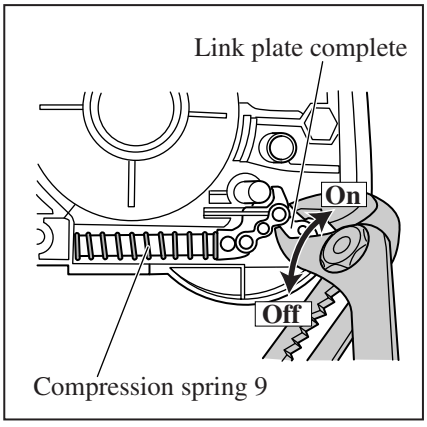

Repair

[3] -4. Kickback Brake Section Including Brake Drum (Sprocket) (cont.)

8) Insert one jaw of 1R005 into the hole of Link plate complete and the other in an appropriate portion of Compression spring 9 as illustrated in **Fig. 13**. By closing the jaws of 1R005, Compression spring 9 can be removed.
9) Remove Link plate complete.

Fig. 13

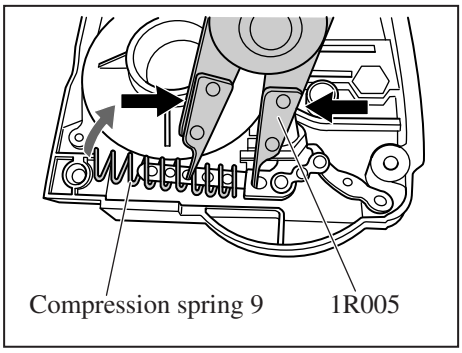

ASSEMBLING

Do the reverse of the disassembling steps.

Note 1: Turn the kickback brake off when assembling Brake drum assembly to the machine.

Note 2: Insert the hinge portion of Link plate complete using slotted screwdriver until it stops as illustrated in **Fig. 14**.

Fig. 14

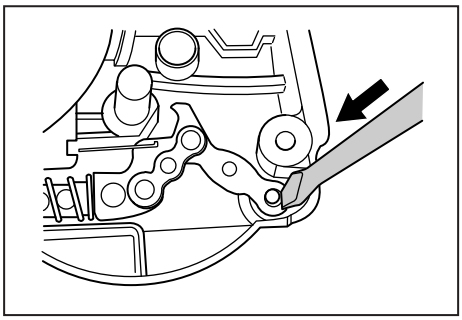

Circuit diagram

Fig. D-1

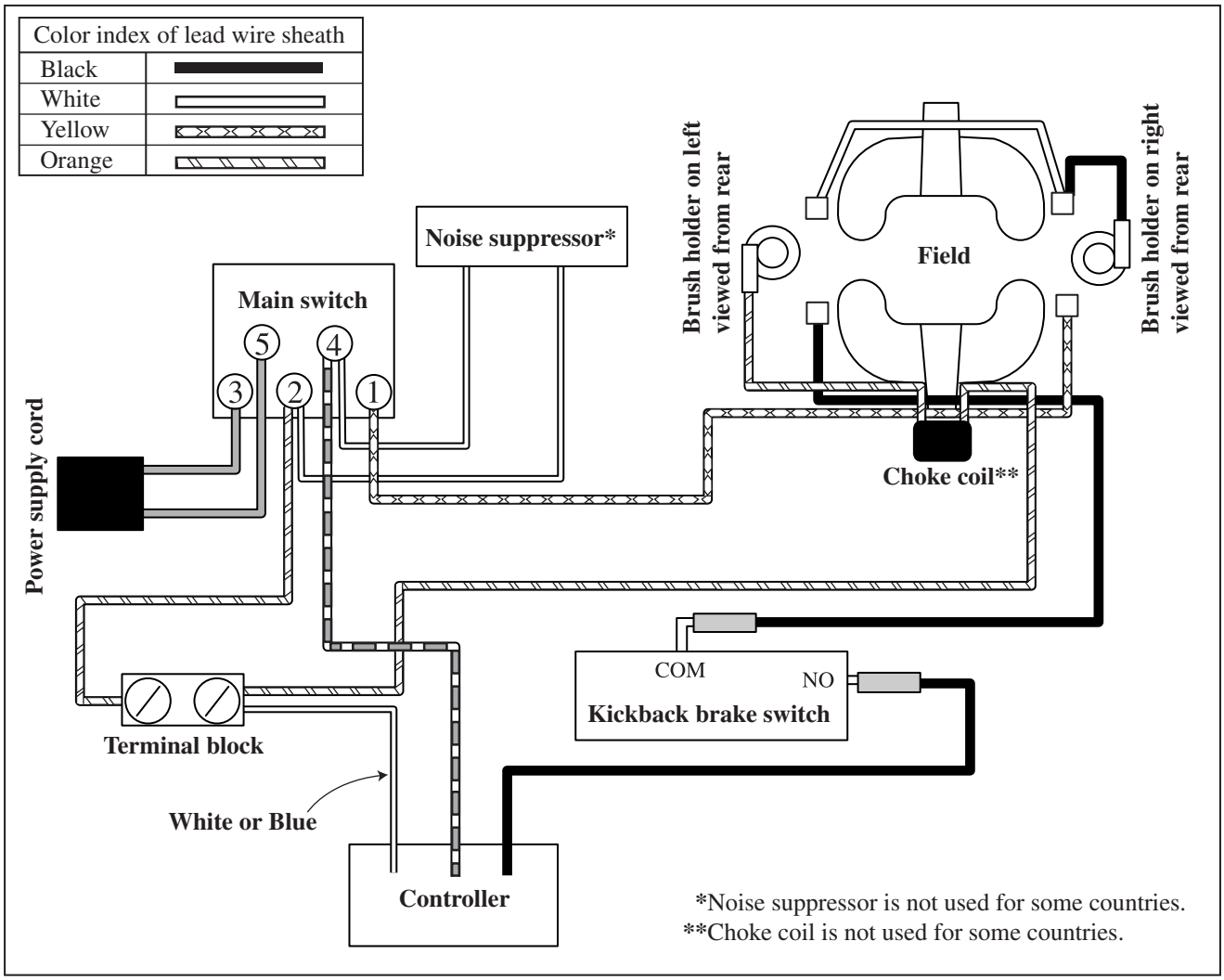

Wiring diagram

Fig. D-2

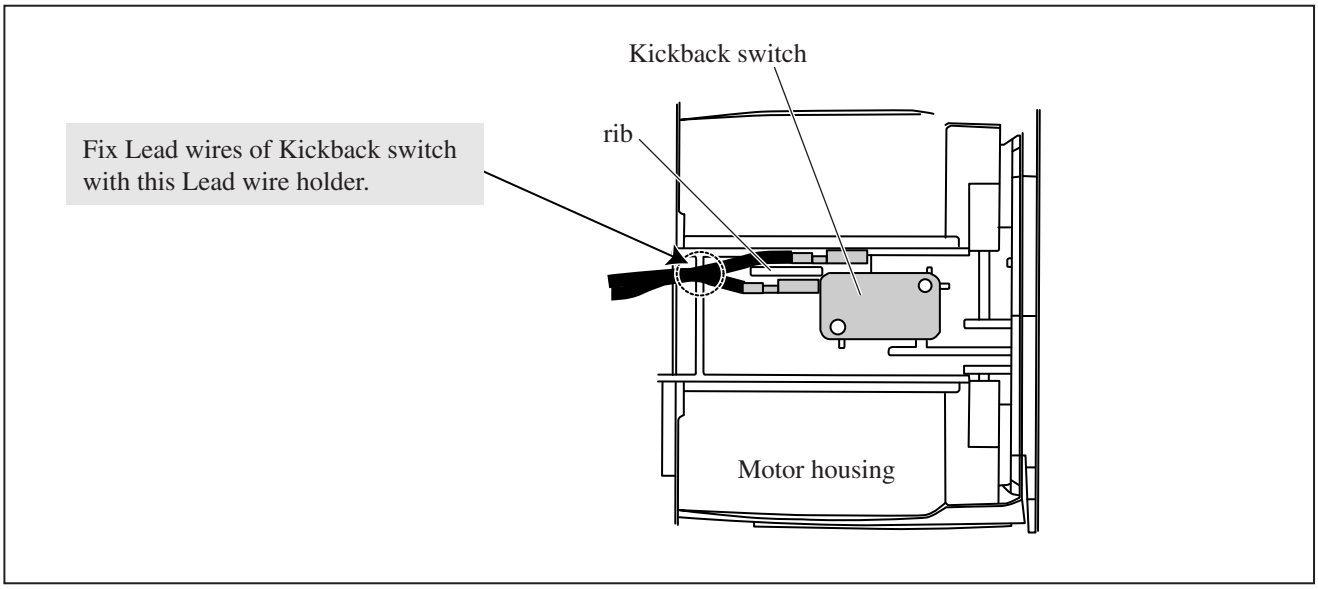

Fig. D-3

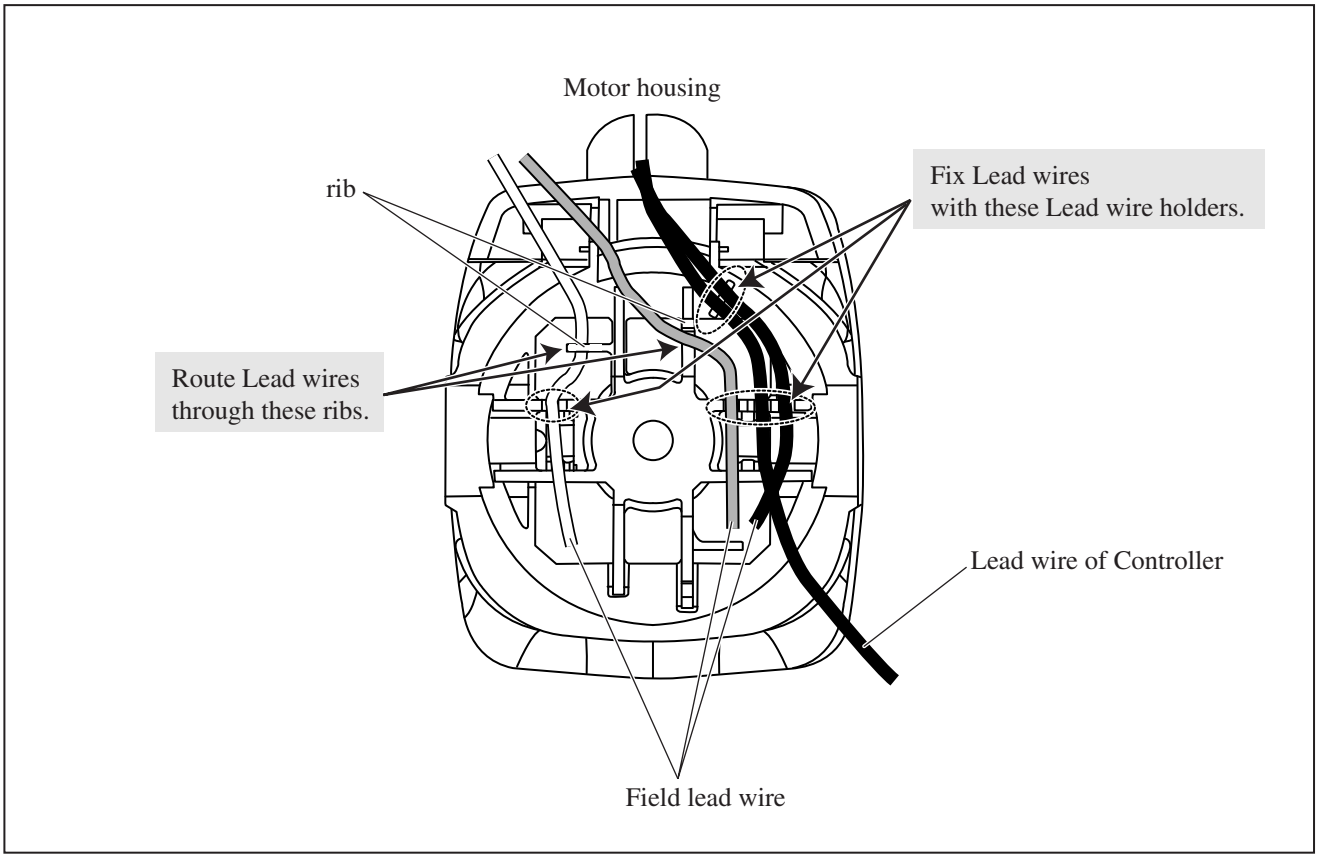

Wiring diagram
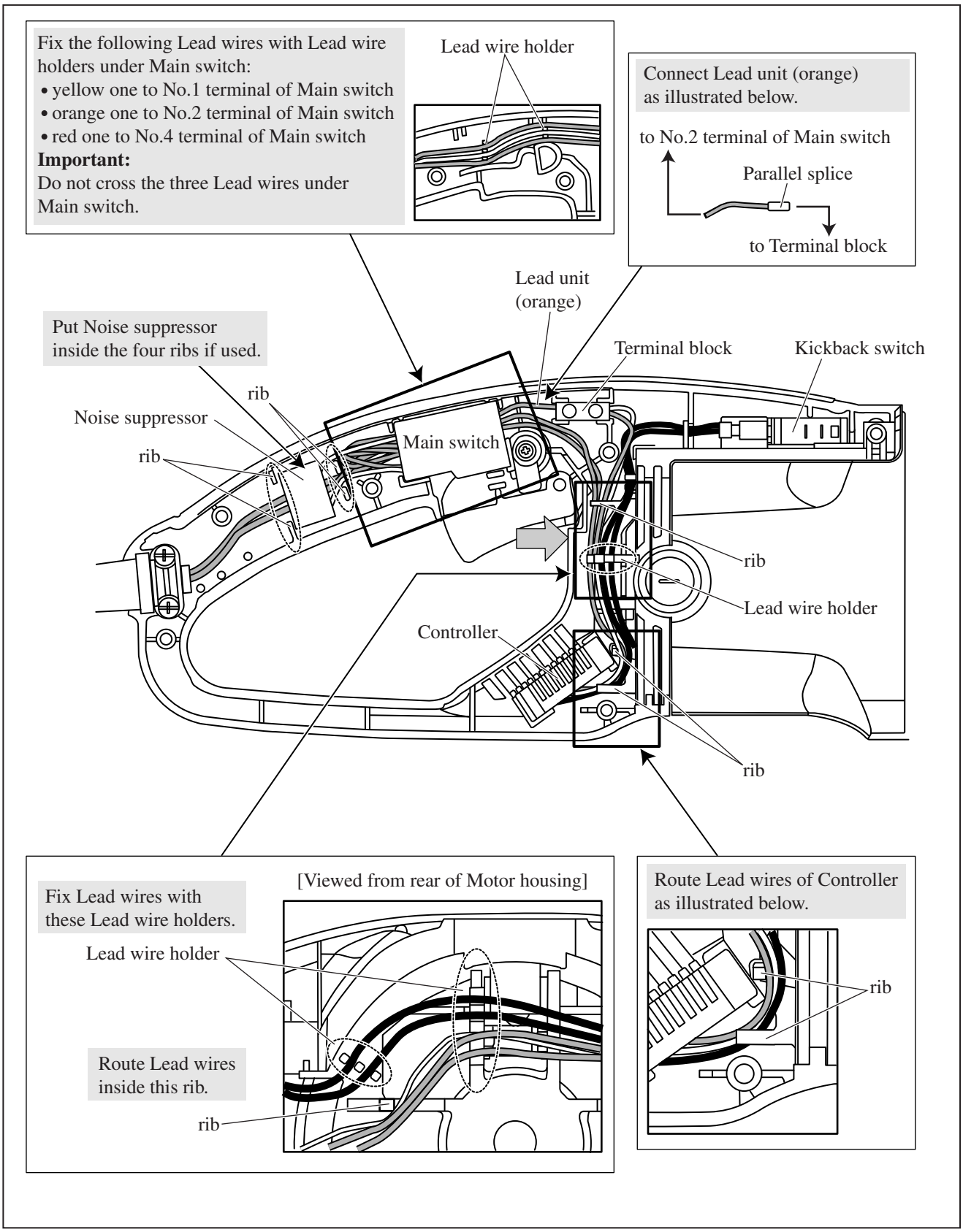
Fig. D-4