TECHNICAL INFORMATION

New Tool

Models No. ► UC3010A

Description ► 300mm, 350mm, 400mm chain saw

CONCEPTION AND MAIN APPLICATIONS

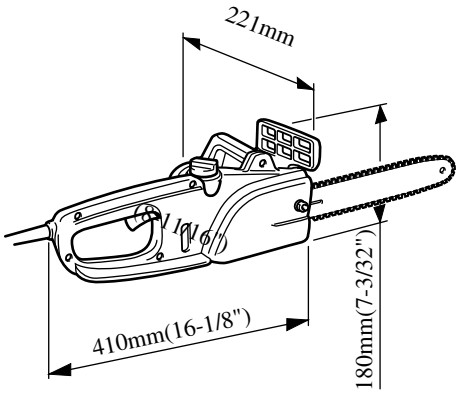

These models are home use chain saws that correspond to the functions

► Specifications

Voltage (V)	Current (A)	Cycle (Hz)	Continuous Rating (W)		Max. Output(W)
			Input	Output	
220-240	7.0	50/60	1500	780	2000

Chain speed		800m/min.
Saw chain	Type	90SG

► Standard equipment

Chain cover ---------- 1 pc.

Pitch 3/8"

Universal wrench ---------- 1 pc.

Gauge 0.042"

► Repair

1. Replacement of carbon
   1) Loosen three tapping screws 4x18 that fix front handle and remove front handle to replace the carbon.
   2) Secure lead wires to the lead holder.

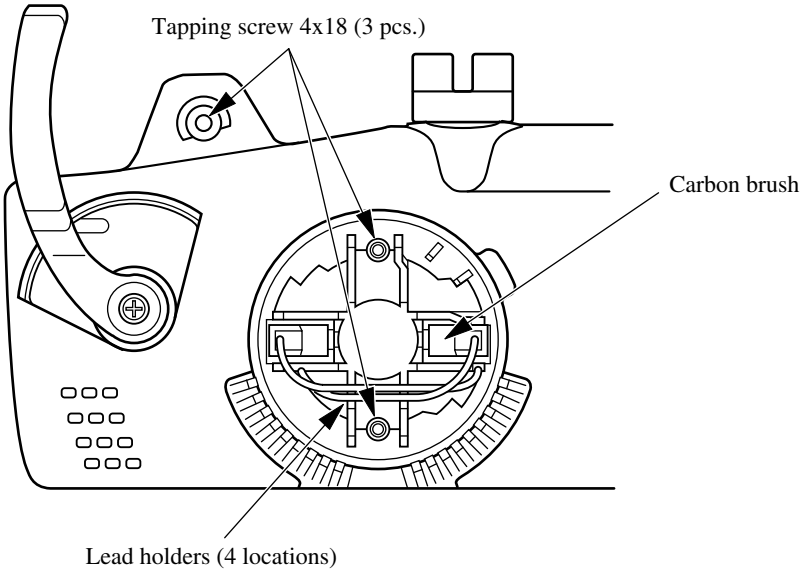

2. Replacement of front hand guard
   1) Put down front hand guard forward and replace it while actuating a kick-back brake.
   2) Mount torsion spring 20 on the front hand guard as shown in the figure below.
   3) Mount the front hand guard to the housing L at an angle as shown below. At this time hook the torsion spring to the boss of the housing L.

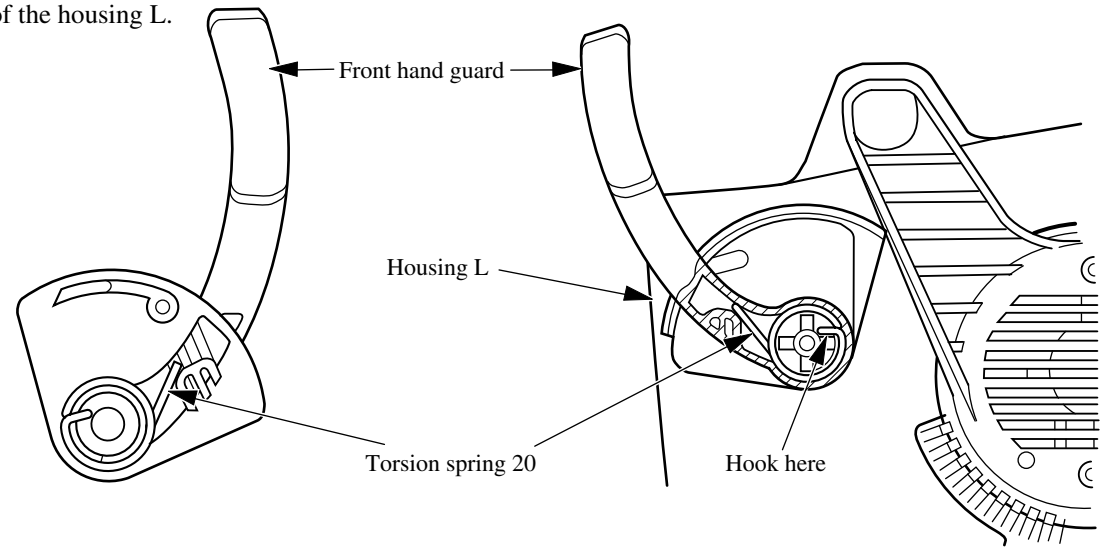

3. Replacement of bearing
   Replace bearing #6001LLB by using two flat head screwdrivers as shown below.

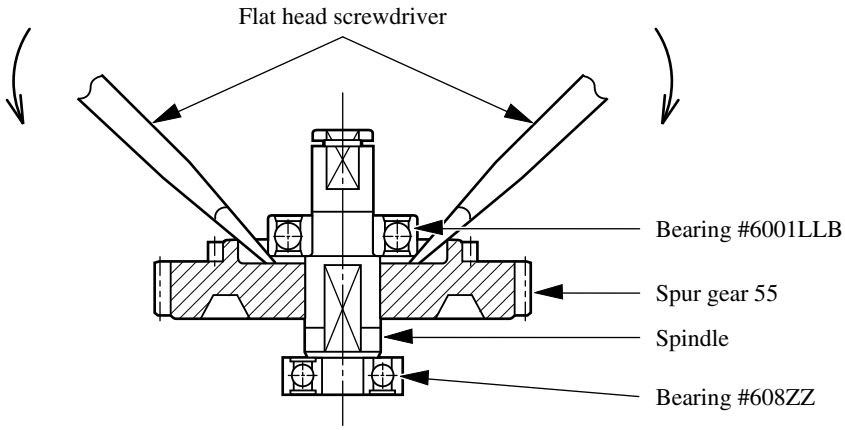

4. Replacement of oil pump complete
   1) Loosen tapping screw 3.5x10 and remove holder.
   2) Remove oil pump complete together with oil bezel.
   3) Secure pipe 6 on the groove of the bearing holder and the pipe holder.
   4) Insert flat washer 5 between bearing holder and spur gear 39.

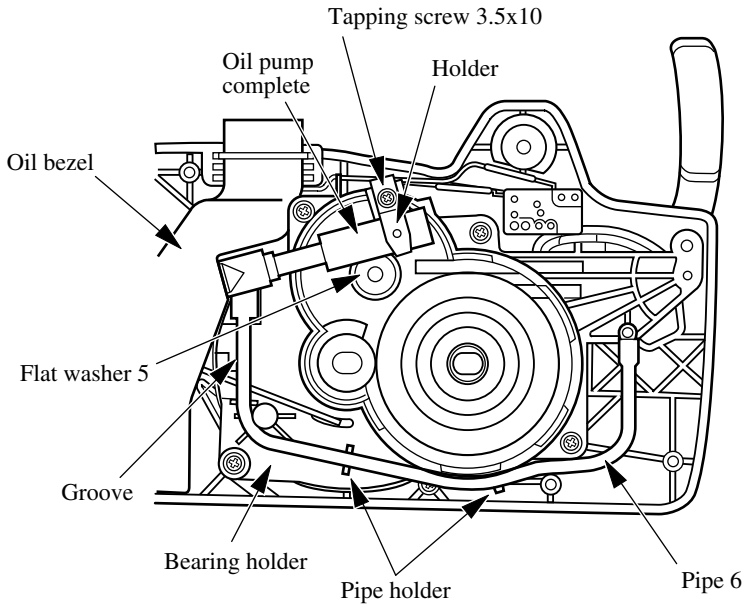

5. Replacement of armature
   1) Before replacement release kick-back brake by following the instruction manual.
   2) Remove carbon by following the procedures of "1. Replacement of carbon."
   3) When pulling out/putting on armature from/to bearing holder, hook a rod to the bearing holder and release the kick-back brake.
   4) Use two flat head screwdrivers to replace the bearing #6000LLB.

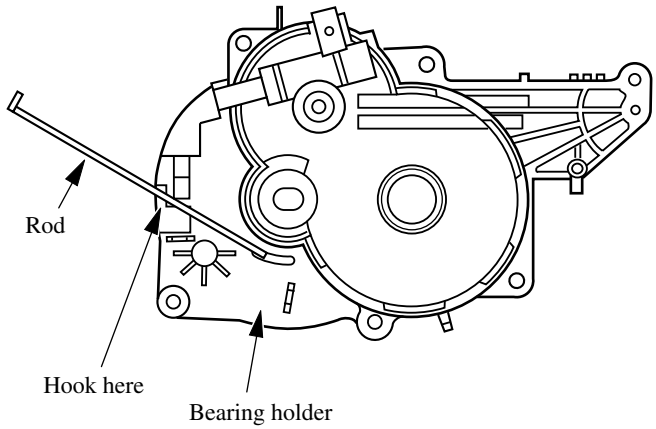

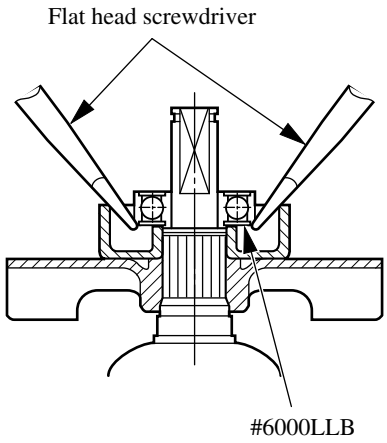

6. Replacement of brake band
   1) Release the brake as the same procedures as 5-1 above.
   2) Before replacing the brake band, insert rink plate complete to the brake band hole and mount it on the bearing holder.
   3) Confirm that the claws of the brake band and those of the brake ring are positioned as shown in the figure below.

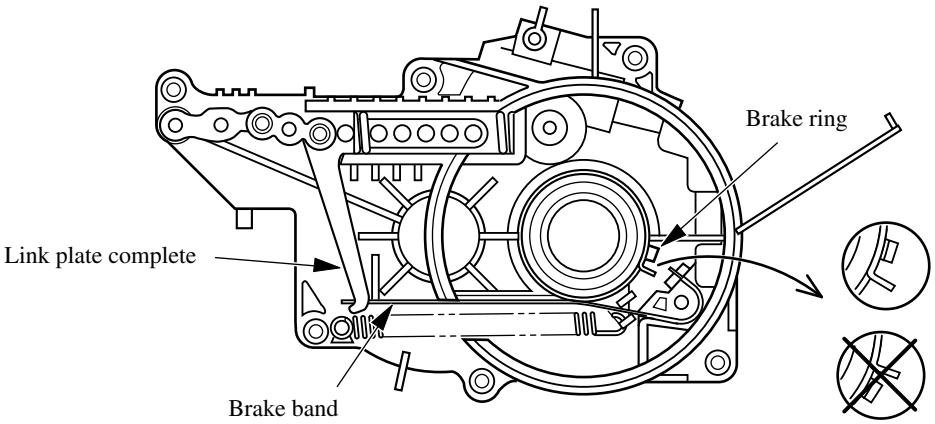

► Wiring diagram

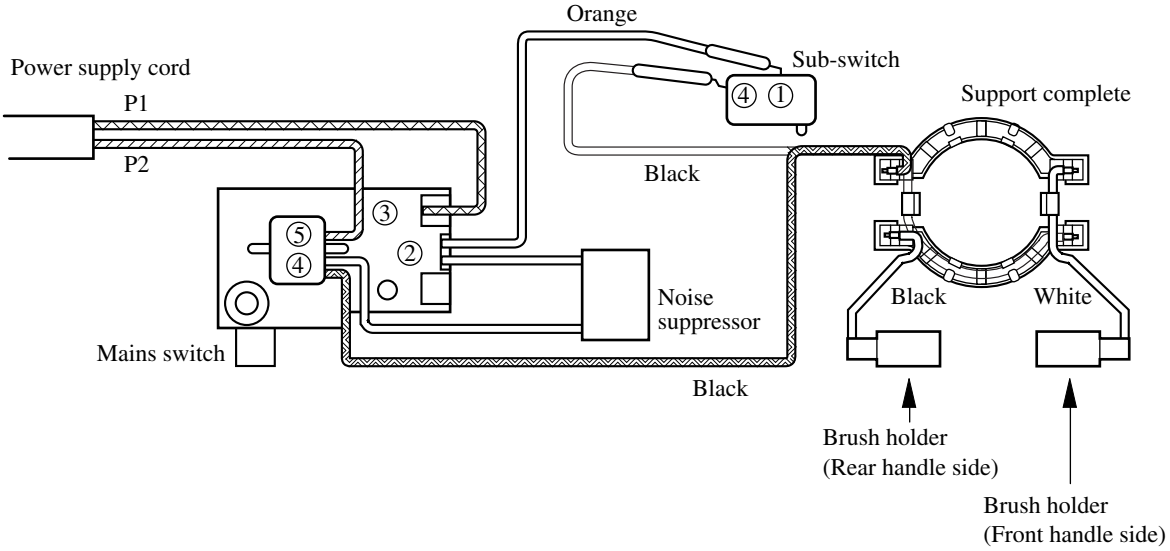
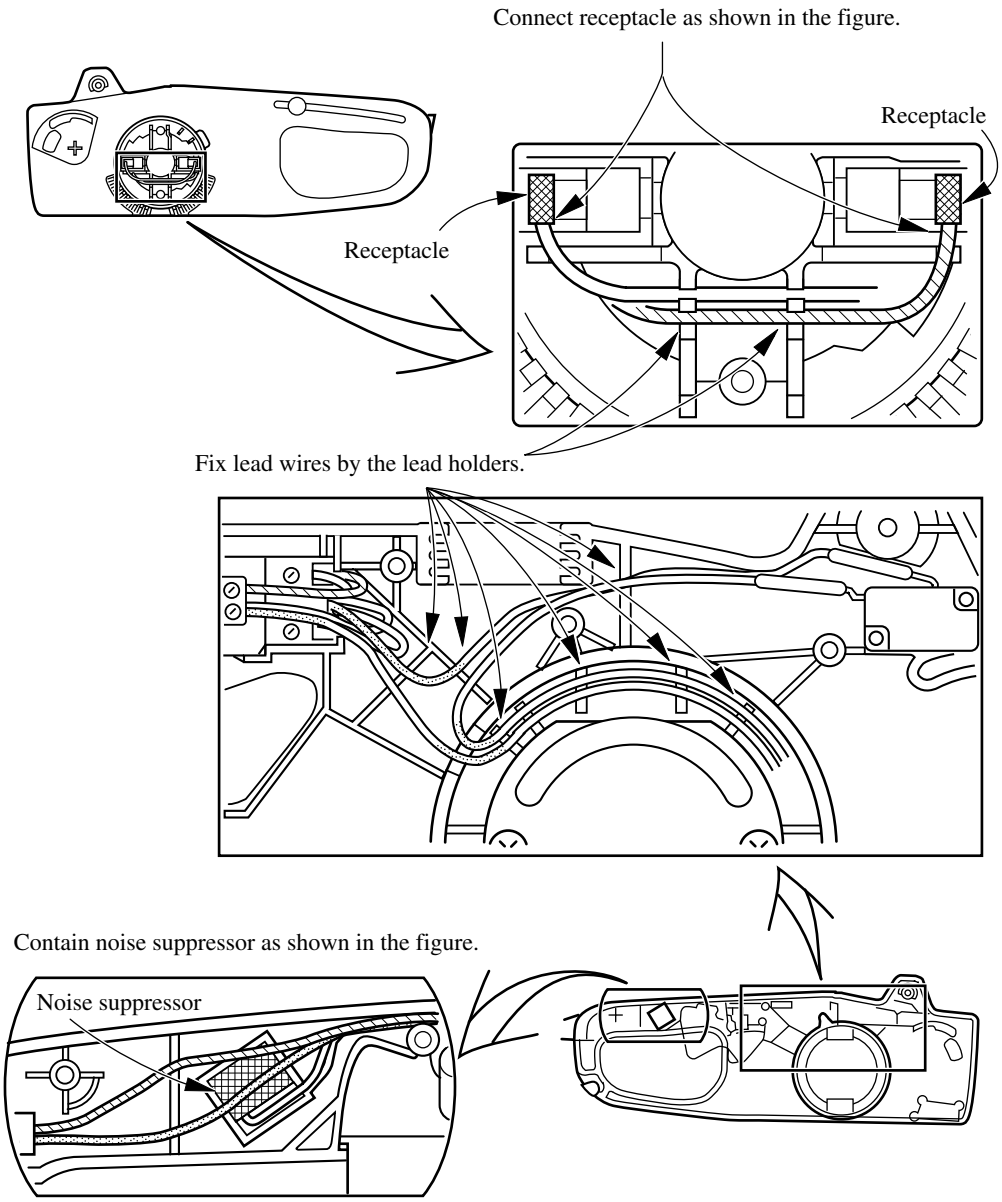
► Details of wiring