TECHNICAL INFORMATION

maktec makita PRODUCT

Models No. ► MT560

Description ► 165mm (6-1/2") Circular Saw

CONCEPTION AND MAIN APPLICATIONS

The above circular saw has been added
to MAKTEC series.
Its features are as follows.
* Less expensive, but service life is as long as the existing model.
* Easy to repair construction

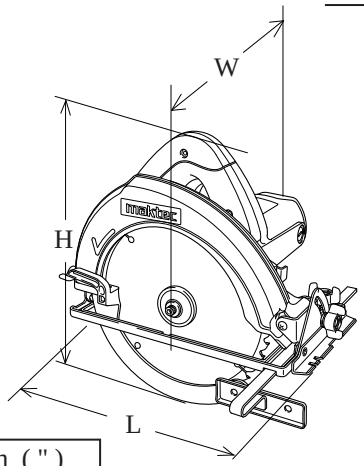

Dimensions : mm (")	
Length (L)	273 (10-3/4)
Width (W)	231 (9-1/8)
Height (H)	230 (9)

► Specification

Voltage (V)	Current (A)	Cycle (Hz)	Continuous Rating (W)		Max. Output(W)
			Input	Output	
110	10.0	50 / 60	1,050	650	1,300
220	5.0	50 / 60	1,050	650	1,300
240	4.6	50 / 60	1,050	650	1,300

No load speed : rpm.= min.-1		4,700
Size of blade	Diameter : mm (")	165 (6-1/2)
	Arbor : mm (")	20 (13/16)
Max.cutting capacities : mm (")	at 90°	56 (2-13/16)
	at 45°	37 (1-7/16)
	at 50°	
Shaft lock		Yes
Electric brake		No
Protection against electric shock		Double insulation
Net weight w/o blade : Kg (lbs.)		3.4 (7.5)
Cord length : m (ft)		2.0 (6.6)

► Standard equipment

* Guide rule ..... 1 pc.
* Hex wrench ..... 1 pc.
* T.C.T. Chip saw blade 165 ..... 1 pc.

< Note > The standard equipment for the tool shown may differ from country to country.

► Optional accessories

* Side grip set

Repair

First of all, detach the saw blade for your safety repair.

< 1 > Lubrication

Apply MAKITA grease N. No.1 to the gear room of blade case marked with black triangle to protect parts and product from unusual abrasion. See Fig. 1.

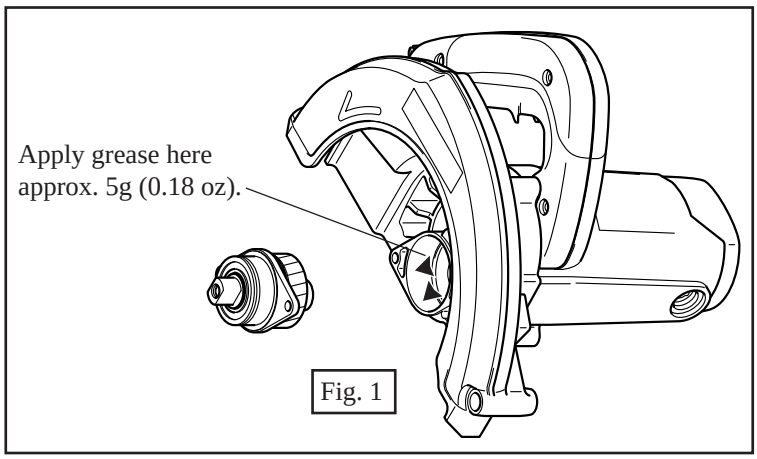

Fig. 1

< 2 > Removing base

1. Take off rubber sleeve by unscrewing pan head screw M6x20. Then, safety cover pivots in the direction of arrow. See Fig. 2.
2. Unscrew wing nut M6, and take off cap square neck bolt M6x26. The contact of blade case with base has been disconnected on the rear side. See Fig. 3.

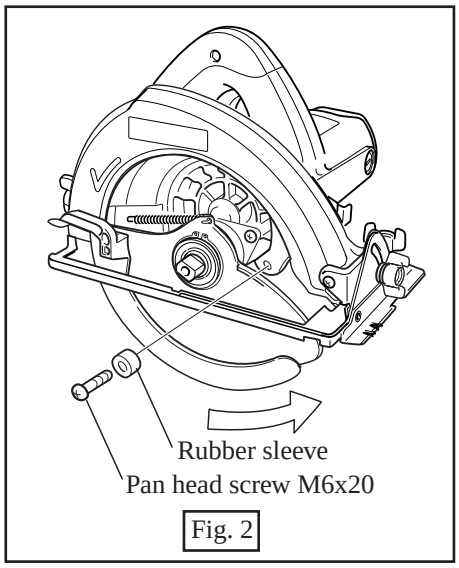

Fig. 2

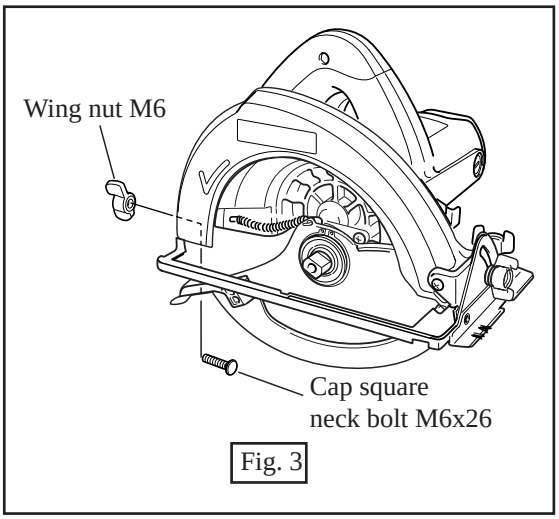

Fig. 3

3. With holding hex nut M5 with wrench 8, unscrew pan head screw M5. Then, the contact of blade case with base has been disconnected both on front and rear side completely. Base can be removed from blade case. See Fig. 4 and Fig. 5.

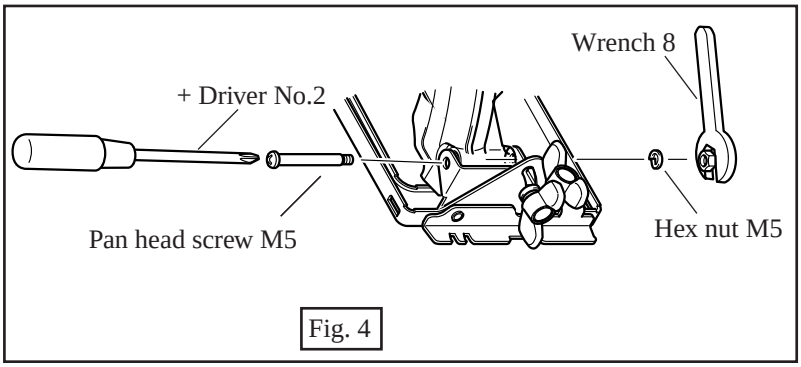

Fig. 4

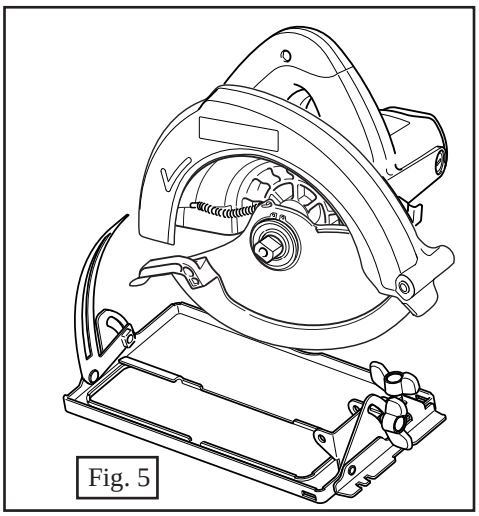

Fig. 5

Repair

< 3 > Removing armature

(1) After removing brush holder cap and carbon brushes, unscrew 3 pcs. of pan head screw M5x40. And separate motor housing from blade case. See Fig. 6.

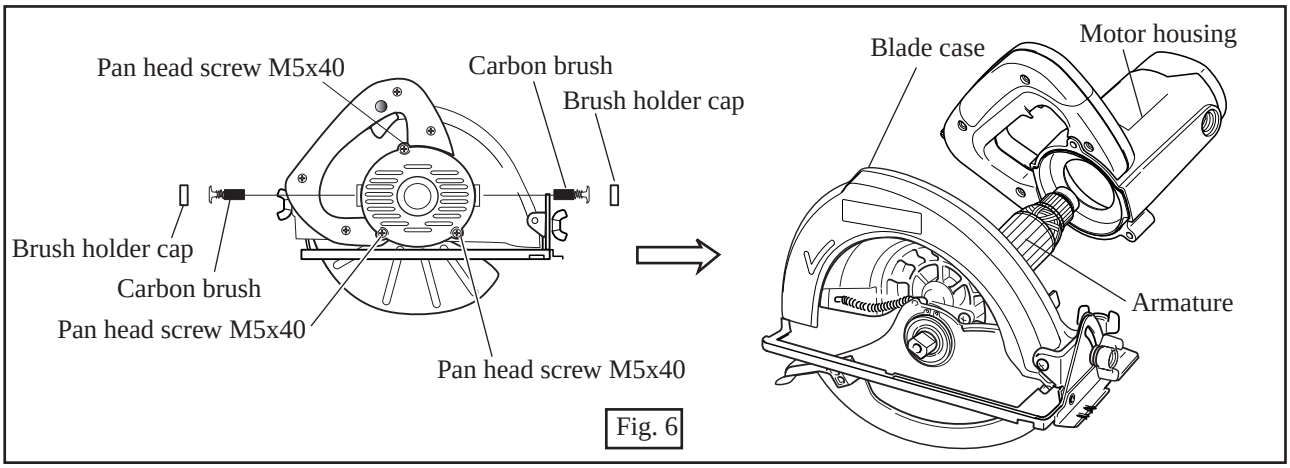

Fig. 6

(2) Remove armature from blade case. See Fig. 7.
In case that the shaft lock is removed together with armature as illustrated in Fig. 7A, be careful, not to lose compression spring.

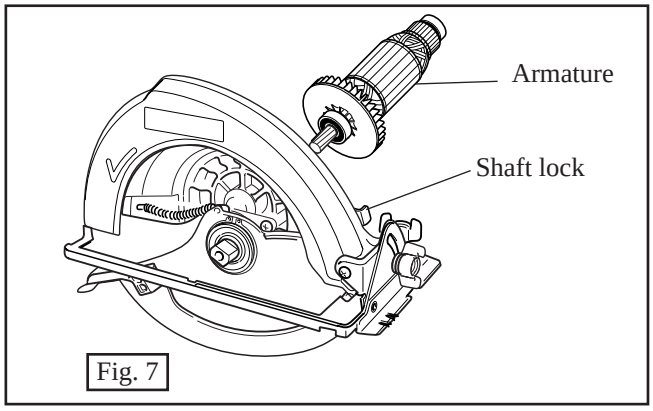

Fig. 7

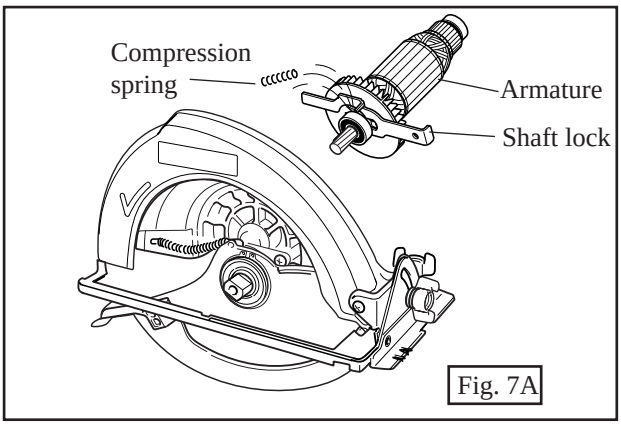

Fig. 7A

< 4 > Mounting armature

(1) In case that armature is removed as illustrated in Fig. 7, mount armature to blade case. In case of removing as illustrated in Fig. 7A, mount shaft lock and compression spring to blade case, before mounting armature. See Fig. 8.

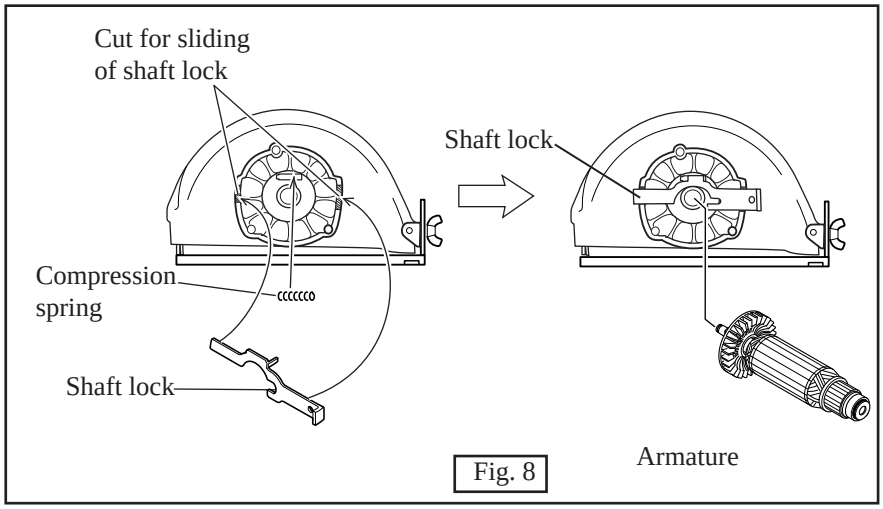

Fig. 8

(2) Mount motor housing and secure it with 3 pcs. of pan head screw M5x40. Refer to Fig. 6.

Repair

< 5 > Disassembling blade case section and gear section

(1) With referring to Fig. 2, Fig. 3, Fig. 4 and Fig. 5 at page 2, separate motor unit from base.

(2) With referring to Fig. 6, Fig. 7 or Fig. 7A at page 3, separate motor housing and armature from blade case.

(3) After removing tension spring, remove retaining ring S-38 with "No.1R003 Retaining Ring Plier"
< Note > When removing, hold the retaining ring S-38 with a gloved hand in order to prevent it from jumping off.

(4) Then, safety cove can be removed from blade case. See Fig. 10.

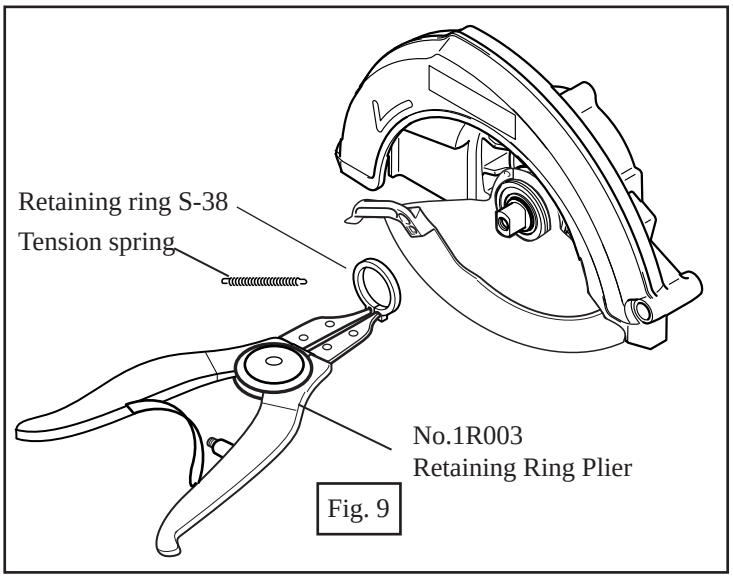

Fig. 9

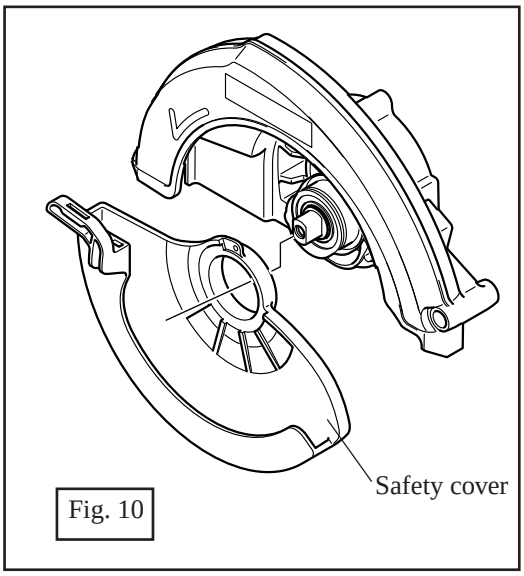

Fig. 10

(5) Unscrew 2 pcs. of pan head screw M5x16, and separate bearing box (gear section) from blade case. See Fig. 11.

(6) Remove ball bearing 606 with bearing extractor, and then, remove retaining ring S-12. See Fig. 12.

(7) Set repairing jigs No.1R217 and 1R032 as illustrated in Fig. 13, and press the 1R032 "Bearing Setting Plate" put on the spindle, with arbor press. See Fig. 13.
Then, helical gear 38 becomes free from spindle and it can be removed together with sleeve from spindle as illustrated in Fig. 14.

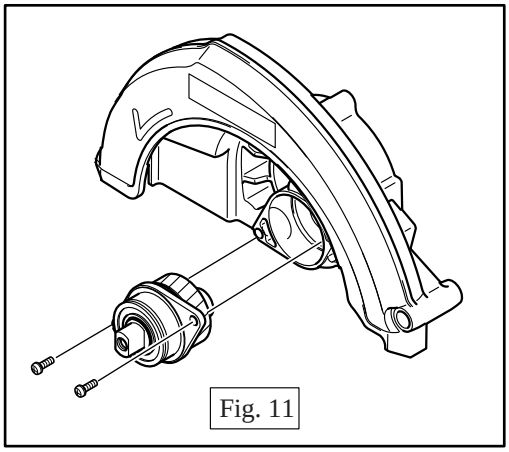
Fig. 11

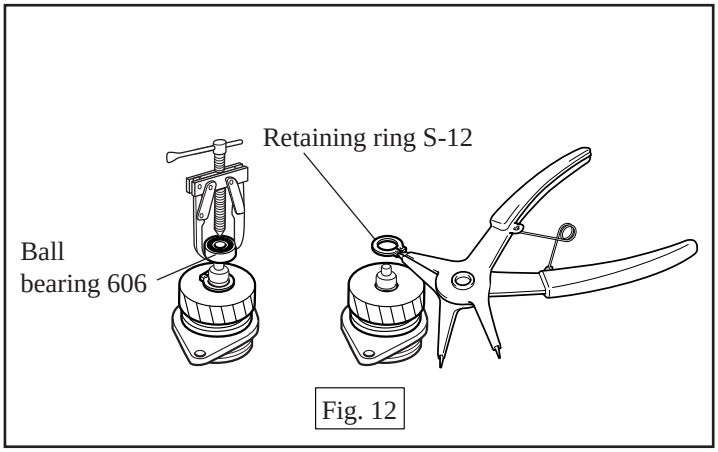

Fig. 12

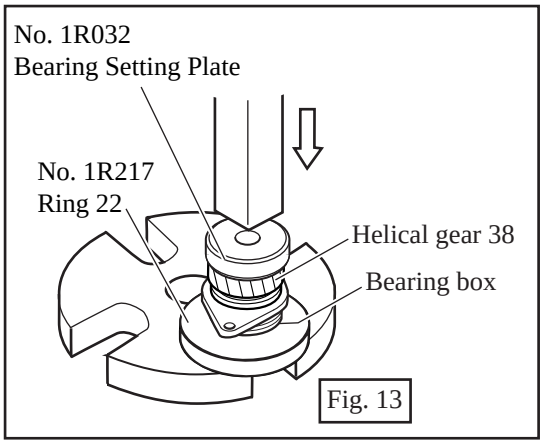

Fig. 13

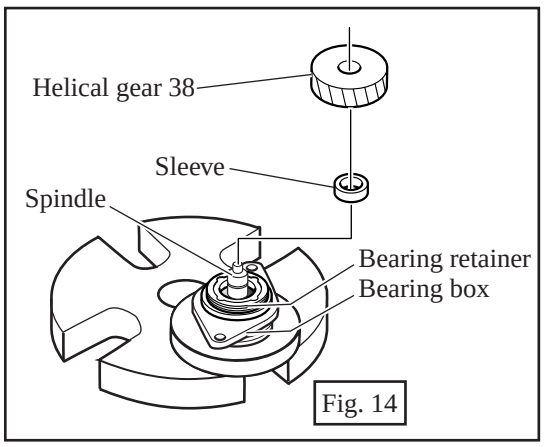

Fig. 14

(8) Holding bearing box with a vise, remove bearing retainer with No.1R316 "Adjustable Bearing Retainer Wrench" by turning it clockwise. See Fig. 15. Then, spindle and ball bearing 6201ZZ can be removed from bearing box.

(9) Put the spindle with ball bearing 6201ZZ on the 1R217 " Ring 22 ", and remove spindle by pressing with arbor press, from the ball bearing 606 side. See Fig. 16.

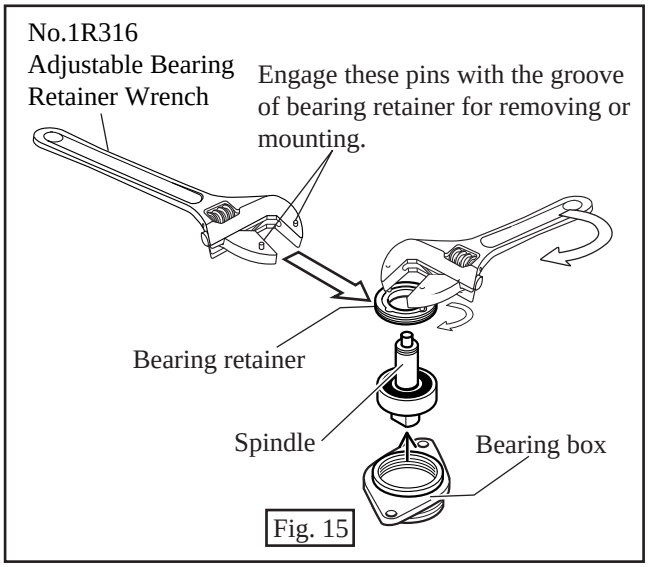

Fig. 15

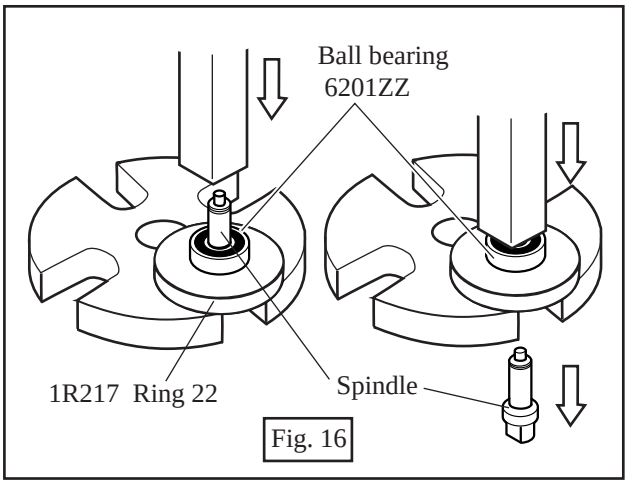

Fig. 16

< 6 > Assembling blade case section and gear section

(1) Mount spindle to ball bearing 6201ZZ by pressing with arbor press. See Fig. 17.

(2) Mount the spindle with ball bearing 6201ZZ to the bearing box. Secure the ball bearing 6201ZZ with bearing retainer by turning it anti-clockwise. See Fig. 18.

(3) After mounting sleeve to spindle, mount helical gear 38 by pressing No.1R032 "Bearing Setting Plate" with arbor press. See Fig. 19.

(4) Mount retaining ring S-12 for securing helical gear 38. See Fig. 20.

(5) Mount ball bearing 606 with arbor press. See Fig. 21.

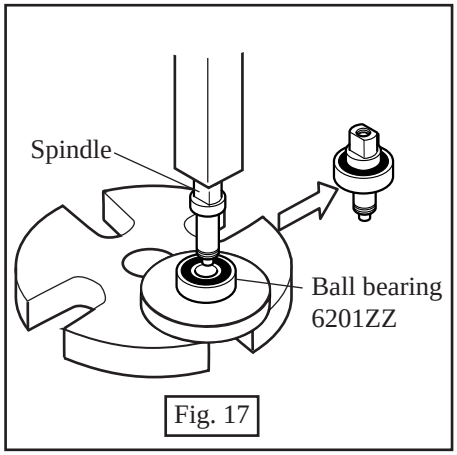

Fig. 17

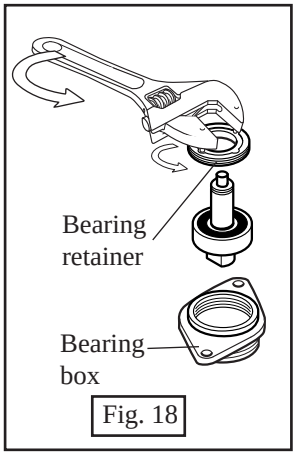

Fig. 18

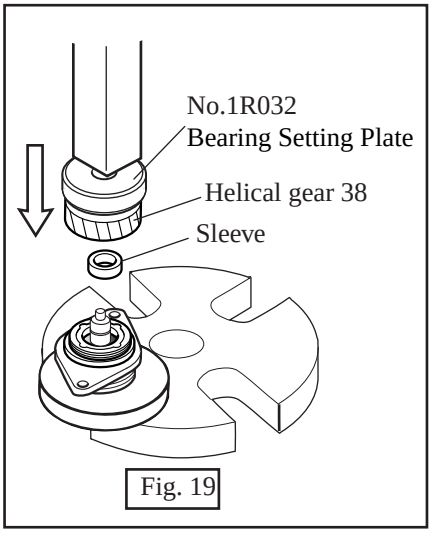

Fig. 19

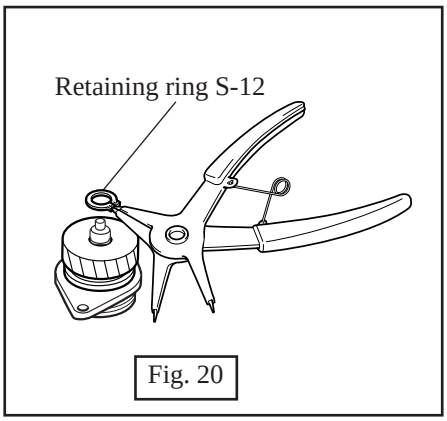

Fig. 20

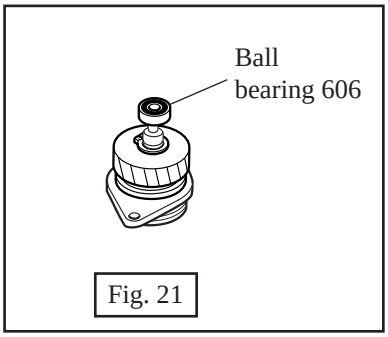

Fig. 21

► Repair

(6) Mount the gear section (bearing box) to blade case by securing with 2 pcs. of pan head screw M5x16. See Fig. 22.

(7) Mount safety cover to the gear section (bearing box). See Fig. 23.

(8) Mount tension spring to blade case in order to link safety cover and blade case. And mount retaining ring S-38 to bearing box (gear section) in order to secure safety cover. See Fig. 24.

< Note > Link the torsion spring with safety cover as illustrated in Fig. 24C in stead of Fig. 24F.

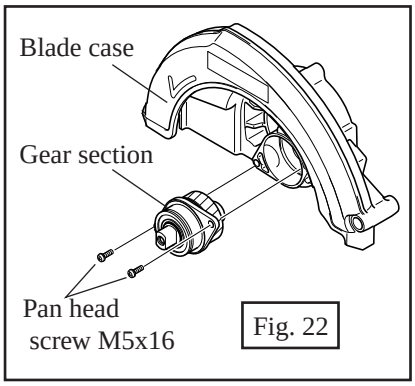

Fig. 22

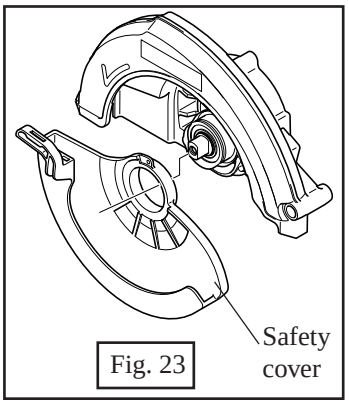

Fig. 23

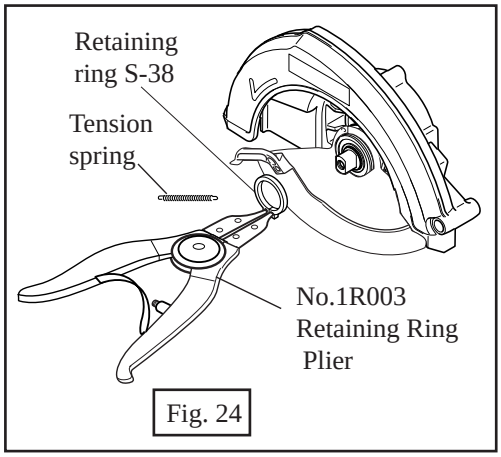

Fig. 24

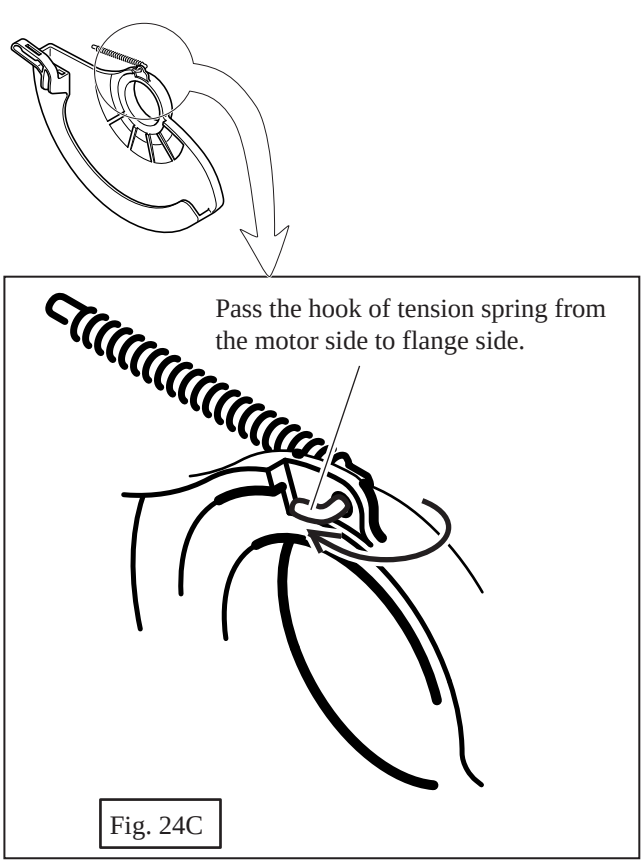

Fig. 24C

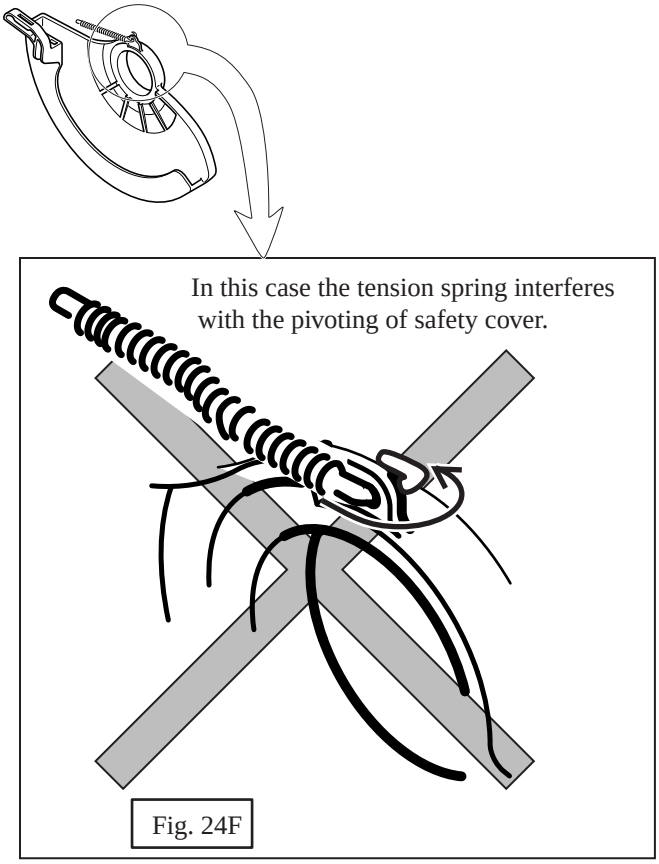

Fig. 24F

Repair

< 7 > Disassembling handle section

(1) After unscrewing 4 pcs. of pan head screw M4x25, remove handle cover. See Fig. 25.

(2) For removing strain relief, unscrew 2 pcs. of tapping screw 4x18 with +screwdriver No.2 of which length is shorter than 50mm (1-15/16"). See Fig. 26.

< Note >
It is difficult to approach to the tapping screw 4x18, if the length of screwdriver is longer than 50mm.

(3) Then, the electrical parts (power supply cord, cord guard, switch, noise suppressor, etc.) can be replaced.

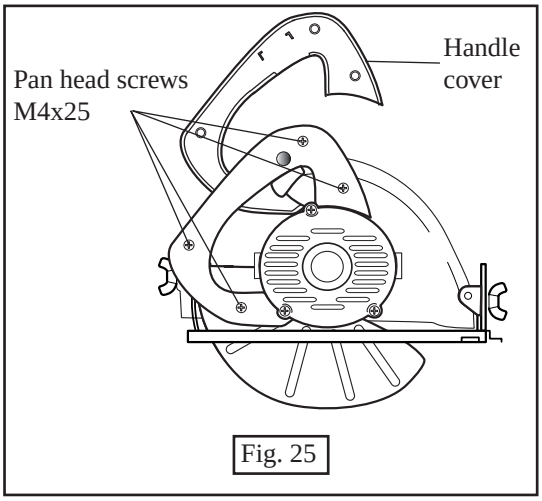

Fig. 25

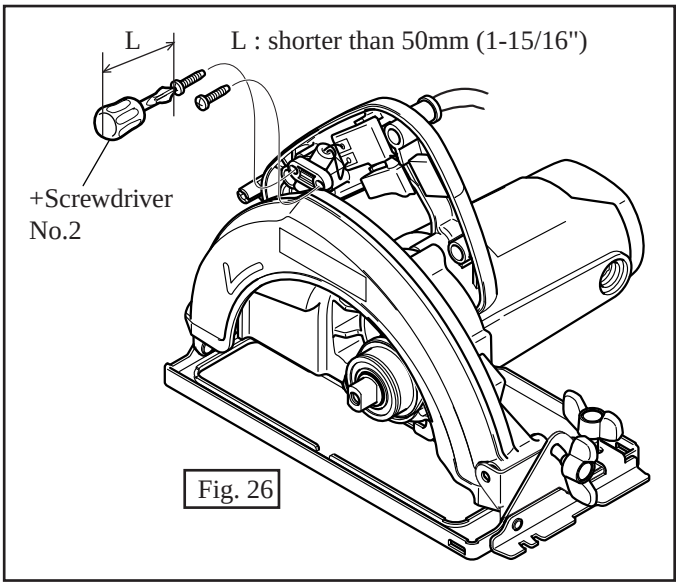

Fig. 26

< 8 > Adjusting the pivot portion
(for adjusting the cutting depth)

The pan head screw M5 has to be tightened with proper torque for smooth pivoting of blade case, when adjusting the cutting depth. See Fig. 27.

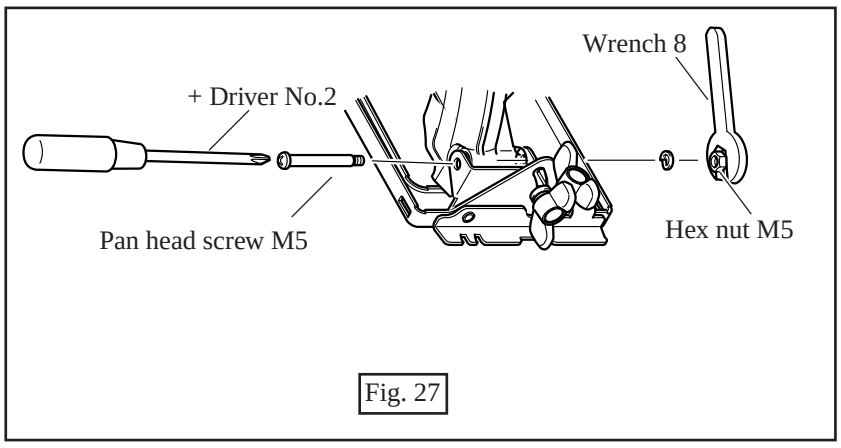

Fig. 27

Circuit diagram

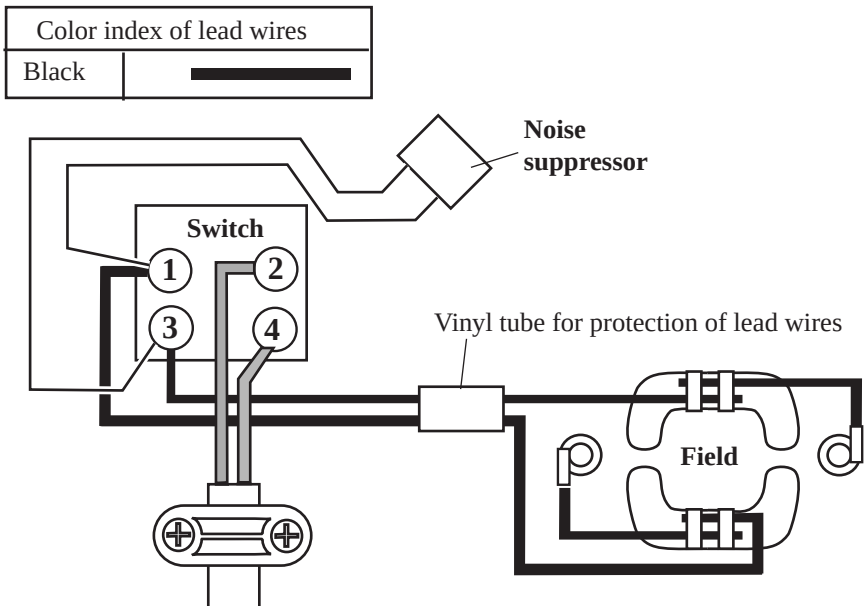

Wiring diagram