TECHNICAL INFORMATION

New Tool

For Models ► ML901,ML902,ML702

Description ► Rechargeable Torches

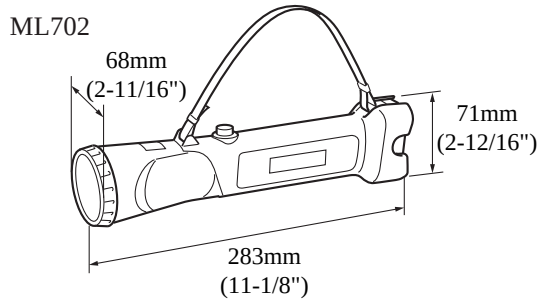

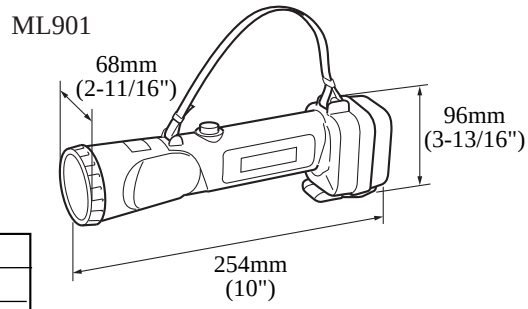

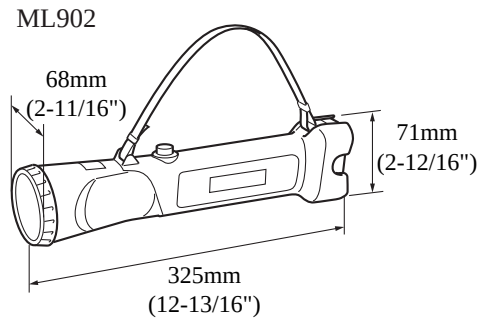

CONCEPTION AND MAIN APPLICATIONS

These three rechargeable torches are designed as improved versions of existing Models ML702/ML900. Each new model is equipped with angle-adjustable torch head and flat rear end for user's further convenience.
Model ML702 is powered by Makita 7.2V batteries 7000,7001 and 7002.
Model ML901 by Makita 9.6V batteries 9100,9101,9101A,9102 and 9102A.
Model ML902 by Makita 9.6V batteries 9000,9001 and 9002.

► Specifications

		ML702	ML901	ML902
Voltage (V)		DC7.2V	DC9.6V	DC9.6V
Current (A)		0.55A	0.50A	0.50A
Net Weight (kg)		0.23 (0.51lbs)	0.23 (0.51lbs)	0.23 (0.51lbs)
Continuous lighting time (min.)	2.0Ah battery	200	200	200
	1.2Ah battery	120	120	120
Bulb		7.2V 0.55A	9.6V 0.50A	9.6V 0.50A
	life(hr)	min.30	min.30	min.30

► Standard equipment

Strap 1
Bulb 2 (1:on tool 1:for replacement)

► Optional accessories

ML702 Bulb set , Makita Batteries 7000,7002.
Fast chargers DC9700, DC1209, DC7112, DC1201
ML901 Bulb set, Makita Batteries 9100, 9102.
Fast chargers DC9700, DC1209, DC9112, DC1201.
ML902 Bulb set. Makita Batteries 9000, 9002.
Fast chargers DC9700, DC1209, DC9112, DC1201.

The Standard equipment for the tools shown may differ from country to country.