TECHNICAL INFORMATION

Models No. ► HM1304

Description ► Demolition Hammer

CONCEPTION AND MAIN APPLICATIONS

Model HM1304 Demolition Hammer has been developed as a successor to the existing Makita Model HM1303, and as a Demolition Hammer conformable to requirements of the new European noise regulation which will be effective from 2006.
Model HM1304 features extremely low noise level although it performs better than HM1303.

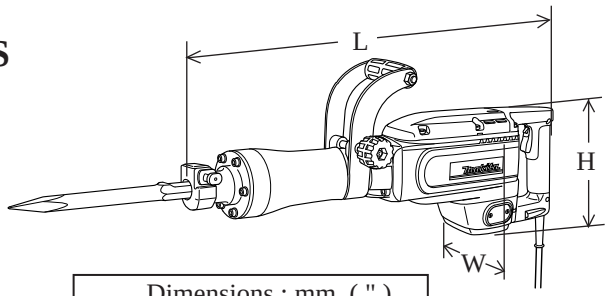

Dimensions : mm (")	
Length (L)	647 (25-1/2)
Height (H)	219 (8-5/8)
Width (W)	115 (4-1/2)

► Specification

Voltage (V)	Current (A)	Cycle (Hz)	Continuous Rating (W)		Max. Output(W)
			Input	Output	
110	14.0	50 / 60	1,500	900	1,600
200	7.9	50 / 60	1,500	900	1,600
220	7.2	50 / 60	1,500	900	1,600
230	6.9	50 / 60	1,500	900	1,600
240	6.6	50 / 60	1,500	900	1,600

Blows per min.: (min^{-1}=bpm)	1,450
Shank :mm (")	30 (1-3/16) hex
Single blow energy (J)	27.5
Protection from electric shock	by double insulation

► Standard equipment

* Bull point 410 ..... 1 pc.

< Note > The standard equipment for the tool shown may differ from country to country.

► Optional accessories

* Bull point 410
* Cold chisel 36 x 410
* Scaling chisel 100-310
* Clay spade 120-500
* Rammer 200

< 1 > Lubrication

Apply the grease a mentioned in the below list to protect parts and product from unusual abrasion.

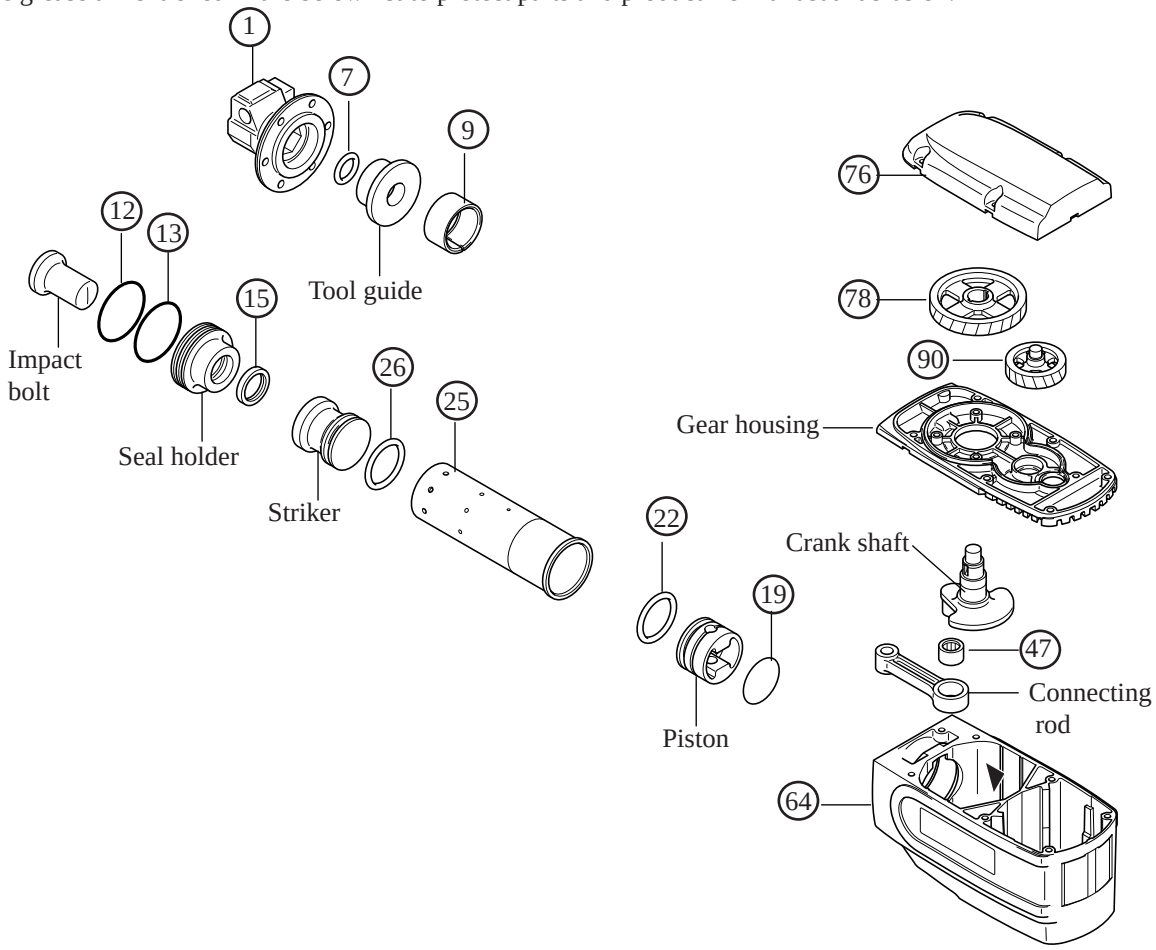

Item No.	Parts	The portion to be lubricated	The grease to be applied	The amount to be applied: g (oz.)
1	Tool holder	Inside where contacts hammer bit.	MAKITA grease R No.00	0.5 (0.02)
7	O Ring 24		MAKITA grease R No.00	0.5 (0.02)
9	Idler	Inside where contacts impact bolt.	MAKITA grease R No.00	0.5 (0.02)
12 / 13	O Rings 61		MAKITA grease R No.00	0.5 (0.02)
15	X Ring 30		MAKITA grease R No.00	0.5 (0.02)
19	O Ring 47		MAKITA grease R No.00	0.5 (0.02)
22	O Ring 44		MAKITA grease R No.00	0.5 (0.02)
25	Cylinder liner	Inside where piston and striker reciprocate	MAKITA grease R No.00	5.0 (0.18)
26	O Ring 44		MAKITA grease R No.00	1.0 (0.05)
47	Needle bearing 1715	Outside where contacts connecting rod's hole.	MAKITA grease R No.00	0.5 (0.02)
64	Crank housing	The portion where marked with black arrow.	MAKITA grease R No.00	60.0 (2.12)
76	Gear housing cover	The side where helical gear 57 and helical gear 34 are mounted.	MAKITA grease N No.1	30.0 (1.06)
78	Helical gear 57		MAKITA grease N No.1	30.0 (1.06)
90	Helical gear 34		MAKITA grease N No.1	30.0 (1.06)

< 2 > Disassembling motor section

(1) Remove holder cap plate by unscrewing pan had screw M5x16. Remove rubber ring 6, brush holder cap and carbon brushes. See Fig. 2.

(2) Remove handle set from crank housing by unscrewing hex socket head bolts M6x50 and M6x40. However, the handle set can not be separated completely from motor housing in this step, because it is still connected with lead wires. See Fig. 3.

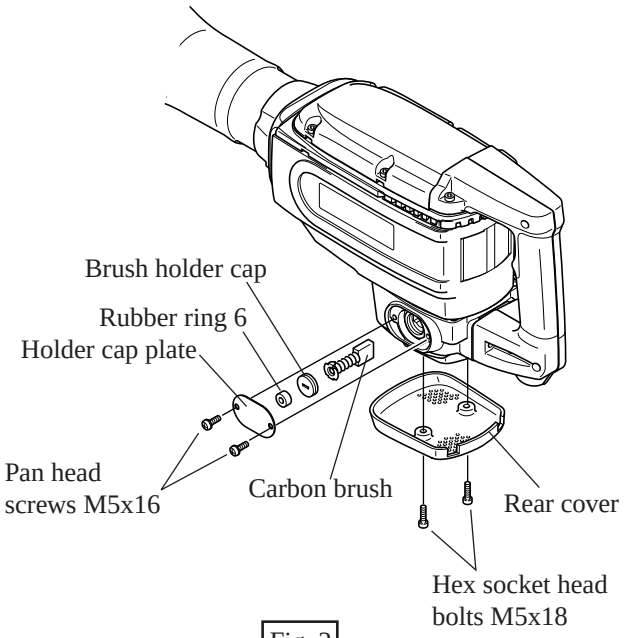

Fig. 2

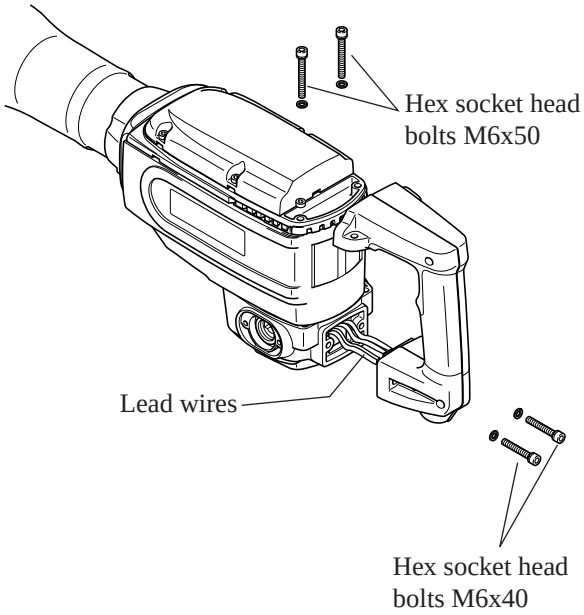

Fig. 3

(3) Unscrew hex socket head bolt M6x50. See Fig. 4.

(4) Strike crank housing as illustrated in Fig. 5. Then, motor housing can be separated from crank housing See Fig. 5.

(5) Strike crank housing as illustrated in Fig. 6. Then, Armature and baffle plate can be separated from crank housing See Fig. 6.

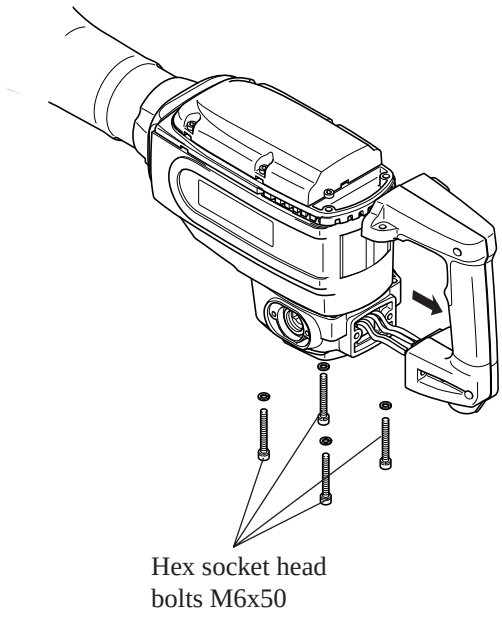

Fig. 4

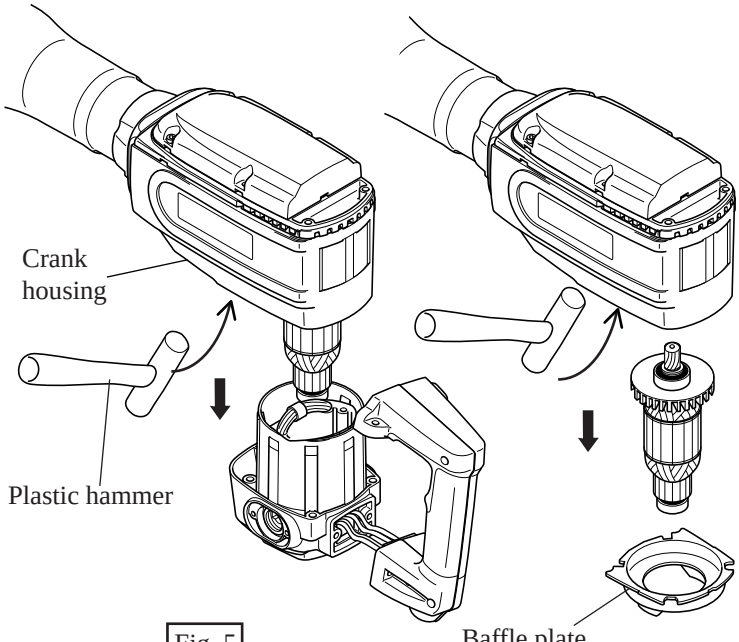

Fig. 5

Fig. 6

Repair

< 3 > Assembling motor section

(1) Make sure that sealing screw has been previously mounted to armature. Mount armature and then baffle plate to crank housing. See Fig. 7.

(2) Make sure that flat washer 18 has been previously mounted in the bearing assembling hole of motor housing (rear cover side). Mount motor housing to crank housing by pressing. Fasten it with hex socket head bolts M6x50. See Fig. 8.

(3) Mount handle set. Fasten it with hex socket head bolts M6x50 and hex socket head bolts M6x40. See Fig. 9. Be careful, not to pinch lead wires with handle set in this step.

(4) Mount rear cover and fasten it with hex socket head bolts M5x18. Mount carbon brushes and fasten it with brush holder cap, rubber ring 6 and holder cap plate. See Fig. 10.

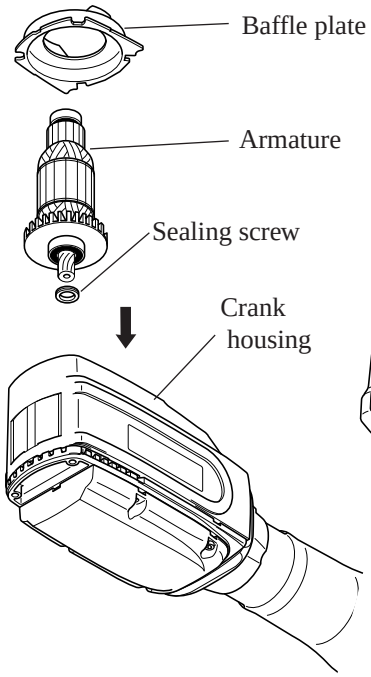

Fig. 7

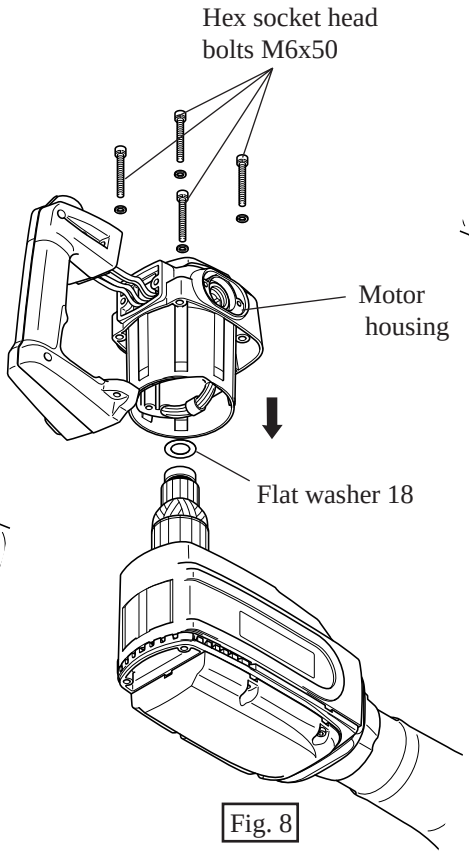

Fig. 8

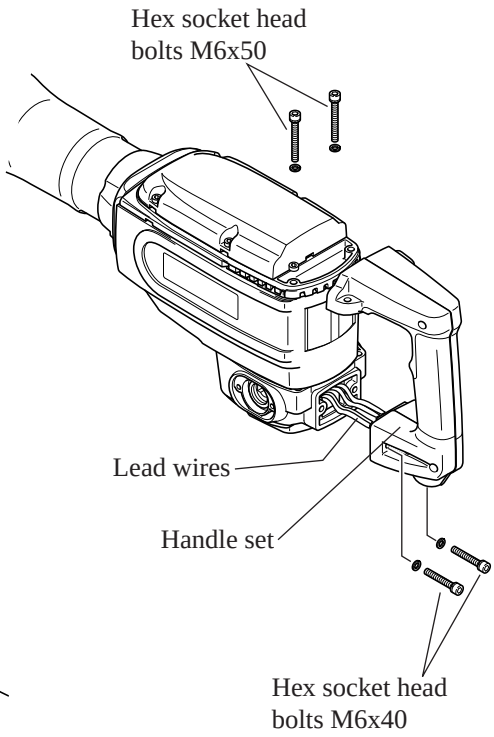

Fig. 9

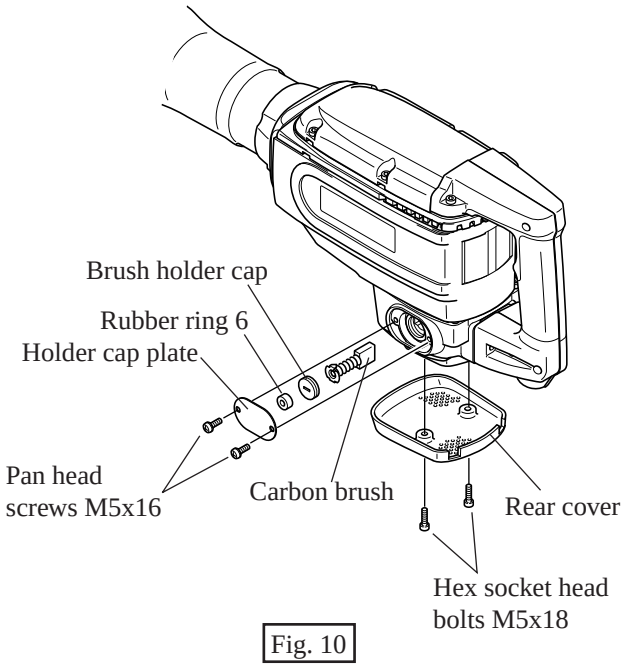

Fig. 10

< 4 > Removing barrel section from crank housing

(1) Take off hex socket head bolts M6x45 and insert slotted head screwdriver into the gap between gear housing cover and gear housing. Lever up gear housing cover with the inserted screwdriver. Then, gear housing cover can be separated from gear housing See Fig. 11.

(2) Remove crank cap from crank housing. Then, you can see hex socket head bolt M6x18 with which connecting rod and crank shaft are connected. See Fig. 12.

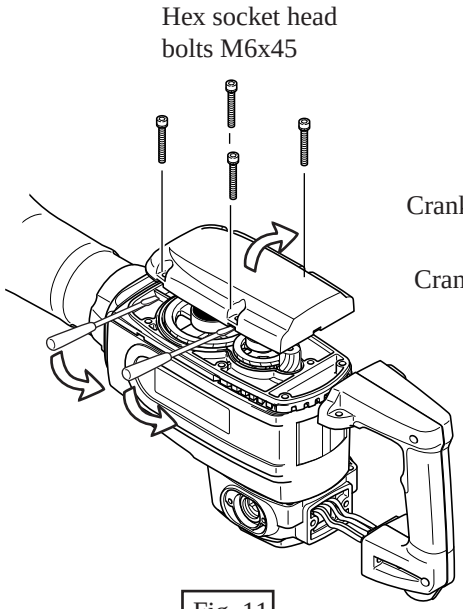

Fig. 11

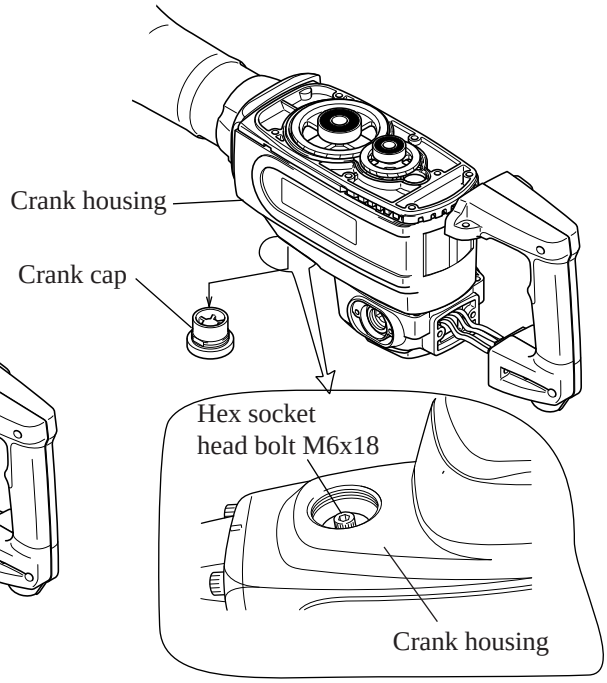

Fig. 12

(3) Take off hex socket head bolt M6x16, flat washer 6 and needle bearing 1715. Then, gear housing (including helical gear 57, helical gear 34, crank shaft armature etc,) can be separated from crank housing. See Fig. 13.

(4) Take off hex socket head bolts M10x40. And then, separate barrel from crank housing. See Fig. 14.

Be careful, not to lose pins 6.

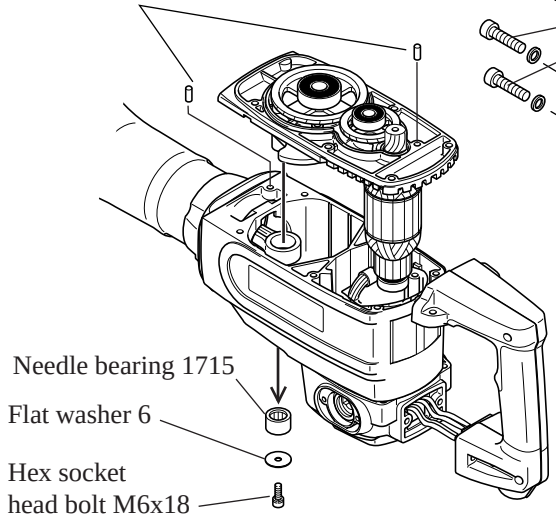

Fig. 13

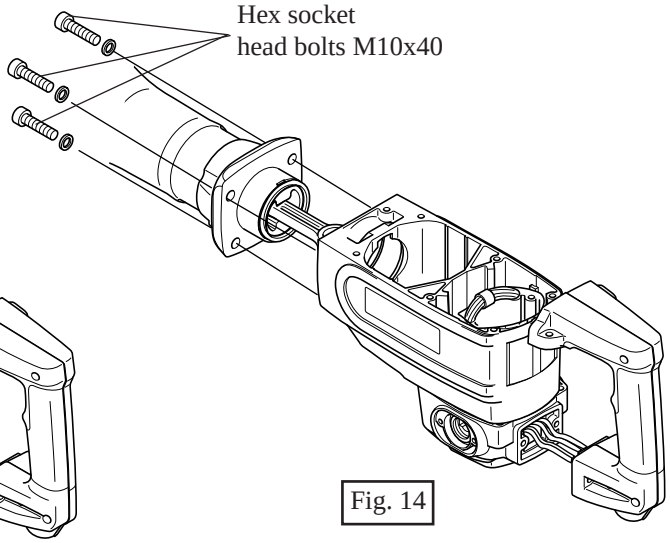

Fig. 14

< 5 > Removing cylinder liner from barrel

(1) Take off hex socket head bolts M8x30 and remove tool holder from barrel. And take off inner parts from barrel. See Fig.15.

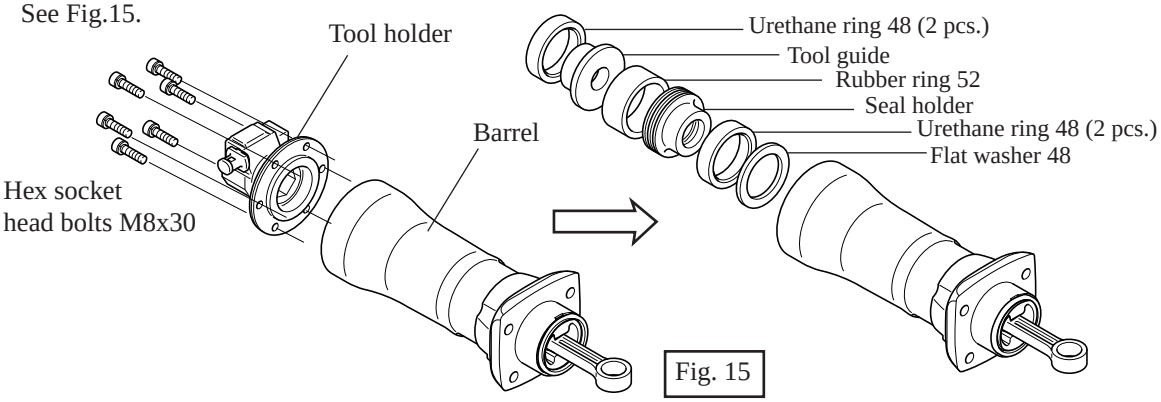

Fig. 15

(2) Put 1R032 "Bearing setting plate" into barrel. And remove cylinder liner from barrel by pressing the 1R032 put into barrel with arbor press. See Fig.16.

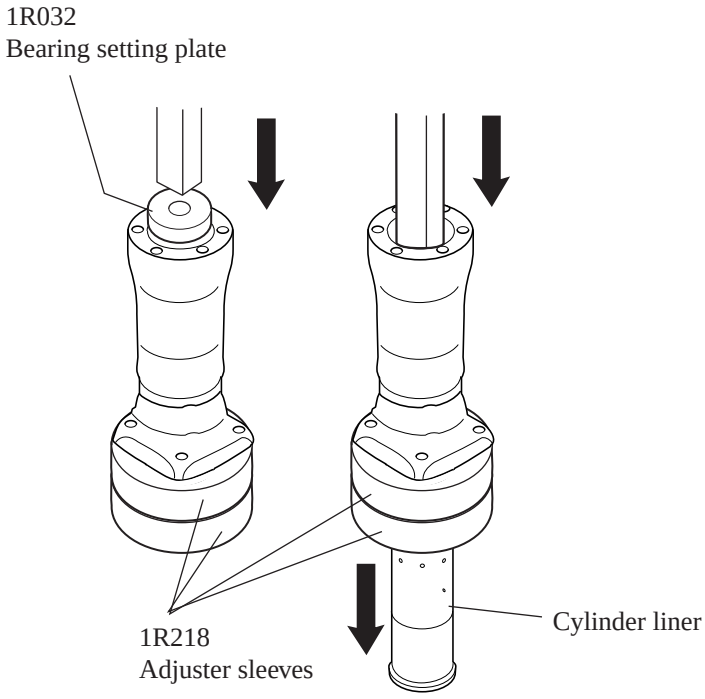

Fig. 16

< 7 > Disassembling tool retainer section

(1) Hold tool holder with 2 pcs. of round bars for arbor. Using 1R284 "round bar for arbor" and 1R306 "Ring spring removing jig", separate tool retainer from tool holder by pressing with arbor press. See Fig.17.

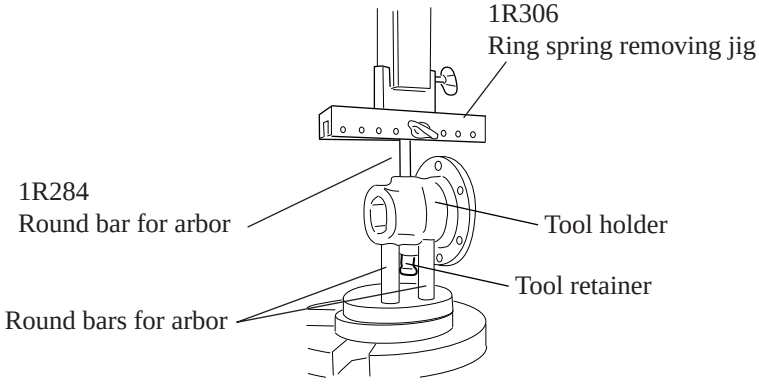

Fig. 17

< 5 > Assembling barrel section to crank housing

(1) Mount cylinder liner into barrel with arbor press. See Fig.18. And mount the parts to barrel as illustrated in Fig. 19.

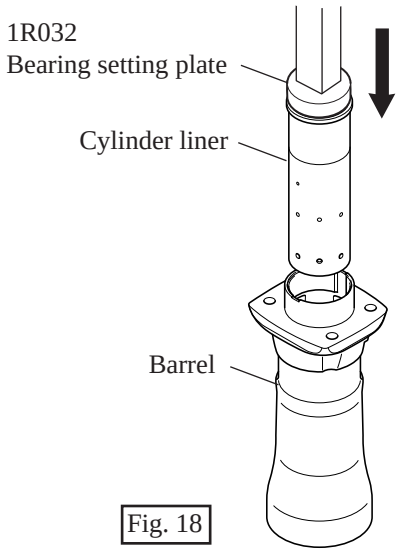

Fig. 18

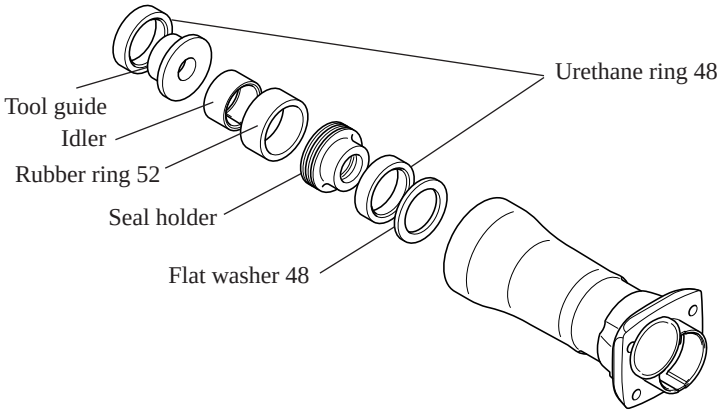

Fig. 19

(2) Mount tool holder and insert piston with connecting rod into barrel as illustrated in Fig 20.

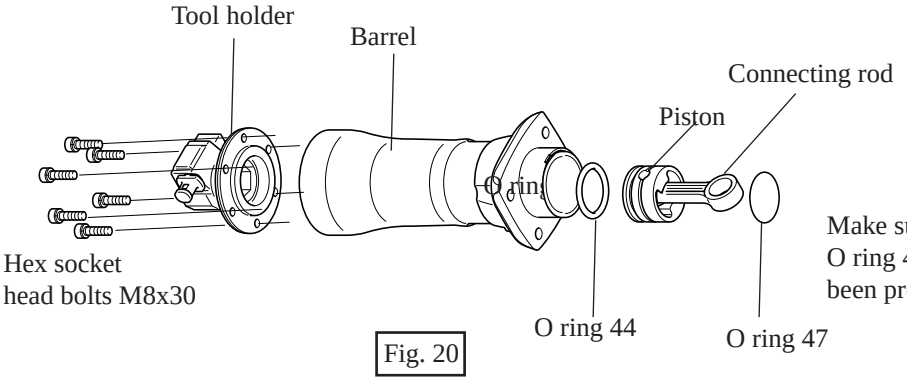

Make sure that O ring 44, and O ring 47 (for holding pin 12) have been previously mounted to piston.

Fig. 20

(3) Mount barrel as illustrated in Fig. 21.
Jointing connecting rod with crank shaft which functions also as a shaft of helical gear 57, mount gear housing section to crank housing. Mount needle bearing 1715 and flat washer 6, and fasten them with hex socket head bolt M6x18 for securing the joint of connecting rod and crank shaft. See Fig. 22.

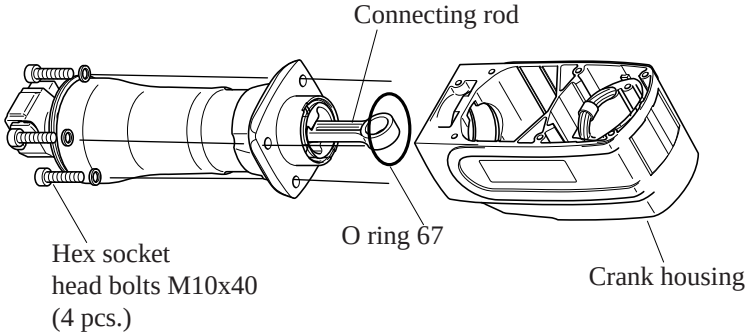

Make sure that O ring 67 has been previously mounted to crank housing.

Fig. 21

Make sure that these pins 6. have been previously mounted to the illustrated positions respectively.

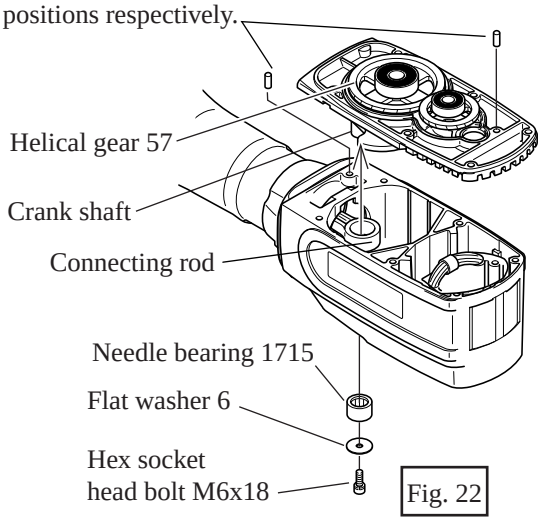

Fig. 22

Repair

< 5 > Disassembling gear housing section

(1) Remove ball bearing 6302 from crank shaft with 1R044 "Small gear extractor". See Fig. 23.

(2) Holding bearing box mounted to gear housing, with 2 pcs. of round bars for arbor (approx. Ø30mm) press the crank shaft and remove it from gear housing. See Fig. 24.
Be careful, not to lose woodruff key 4 in this step.

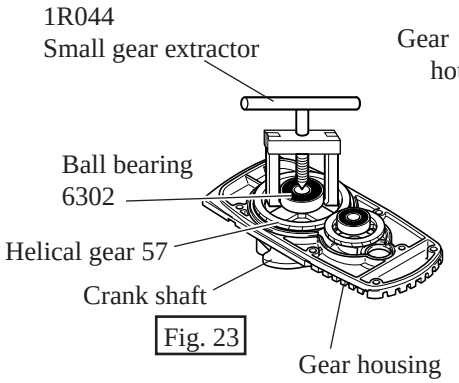

Fig. 23

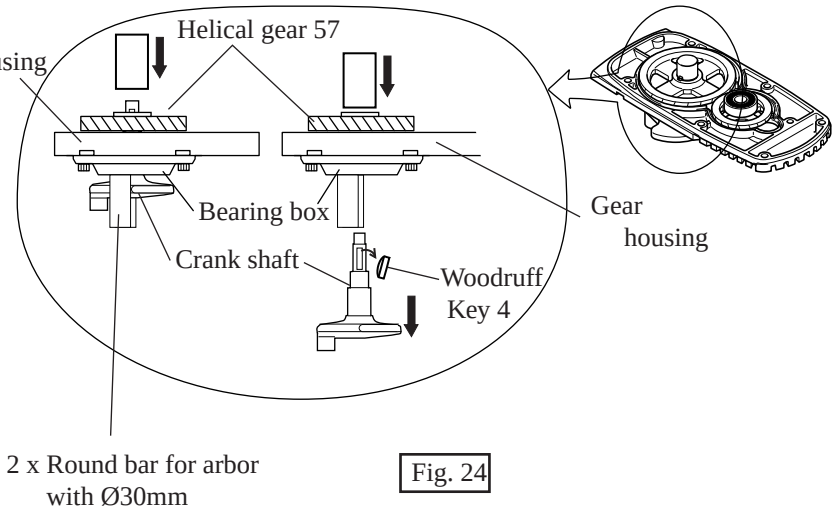

Fig. 24

(3) Then, helical gear 57 and ring 25 can be separated from gear housing. See Fig.25.
Remove bearing box by unscrewing hex socket head bolts M6x22, ball bearing 6205LLU can be separated from gear housing. See Fig.26.

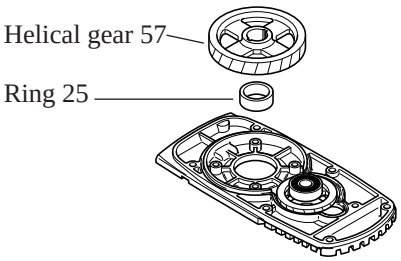

Fig. 25

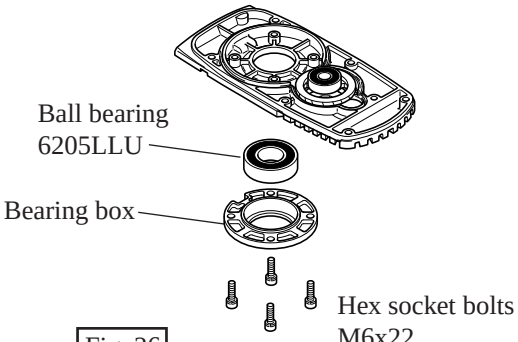

Fig. 26

< 6 > Assembling gear housing section

(1) Mount ball bearing 6205LLU to bearing box. Fasten the bearing box with 4 pcs. of hex socket head bolts M6x22. See Fig. 27.

(2) Mount crank shaft by pressing through ball bearing 6205LLU with arbor press. See Fig. 28.

(3) Mount ring 25 through crank shaft and insert woodruff key 4 into the groove of crank shaft. See Fig. 29.

< Note > It is recommended to put grease into the groove of crank shaft to prevent woodruff key 4 from falling off crank shaft at the mounting of helical gear 57.

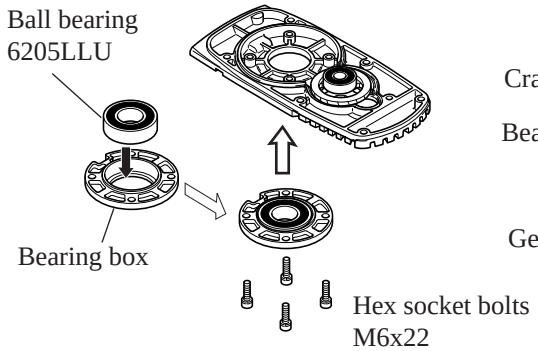

Fig. 27

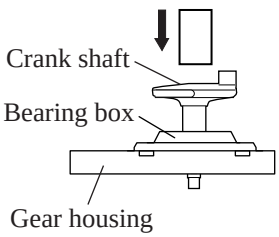

Fig. 28

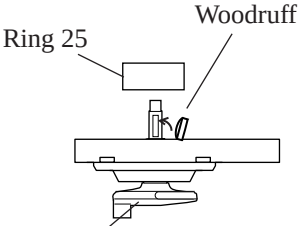

Fig. 29

(4) Aligning the cut portion of helical gear 57 with the woodruff key 4, mount helical gear 57 to crank shaft by pressing crank shaft with arbor press. See Fig. 30.

(5) Mount ball bearing 6302 to crank shaft by pressing crank shaft with arbor press. See Fig. 31.

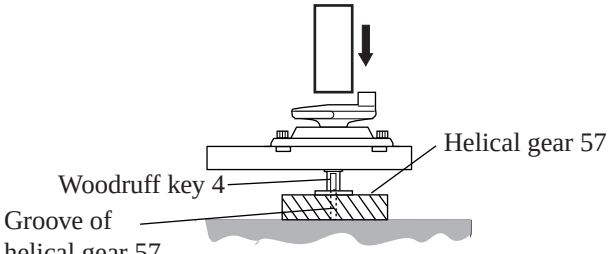

Fig. 30

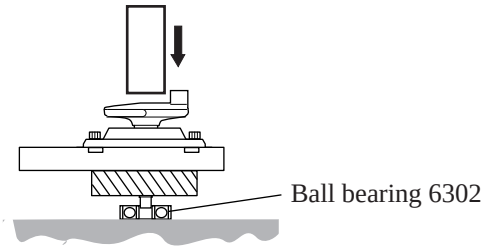

Fig. 31

(6) Assemble helical gear 34 to which ball bearings 6001 and 6201 have been previously mounted, to gear housing. See Fig. 32.

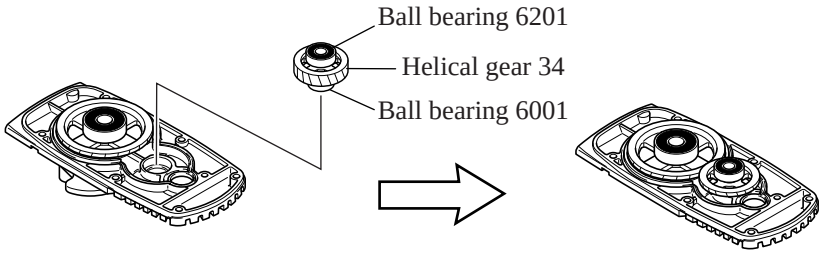

Fig. 32.

< 7 > O ring and X ring

(1) Apply the grease to O rings and X ring for securing the function of grease pack system. The dust which can damage the O ring, X ring and cylinder, has to be taken off.

(2) When inserting impact bolt into seal holder, be careful, not to damage the rip of X ring 30. See Fig. 33.

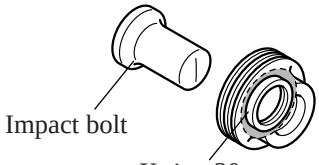

Fig. 33

< 8 > Assembling idler

Mount idler facing its large hole side to impact bolt as illustrated in Fig. 34A instead of Fig. 34B.

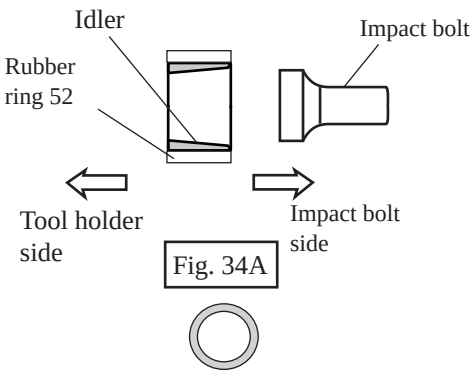

Fig. 34A

The wrong installing of idler interferes with the blow action, which is the cause of the breakage of machine itself.

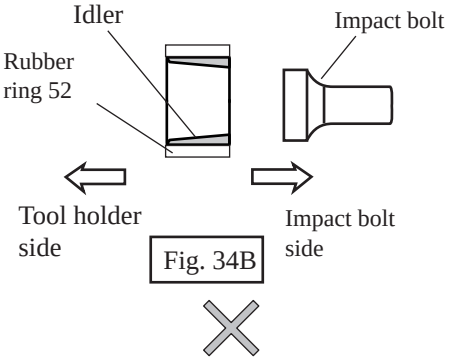

Fig. 34B

► Repair

< 9 > Fastening torque of bolts and screws

Fasten the parts with the following fastening torque.

(1) Hex socket head bolts M8x30 (6pcs.) joining tool holder with barrel : 29 - 39 N.m (300 - 400 Kgf.cm)

(2) Hex socket head bolts M10x40 (4 pcs.) joining barrel with crank housing : 49 - 59 N.m (500 - 600 Kgf.cm)

(3) Hex socket head bolts M6x45 (4 pcs.) joining gear housing cover with crank housing : 13- 16 N.m (130 - 160 Kgf.cm)

(4) Hex socket head bolts M6x22 (4 pcs.) joining bearing box with gear housing : 13 - 16 N.m (130 - 160 Kgf.cm)

(5) Hex socket head bolts M6x50 (2 pcs.) joining handle set with crank housing : 3.9 - 5.9 N.m (40 - 60 Kgf.cm)

(6) Hex socket head bolts M6x40 (2 pcs.) joining handle set with motor housing : 3.9 - 5.9 N.m (40 - 60 Kgf.cm)

(7) Hex socket head bolts M6x50 (4 pcs.) joining motor housing with crank housing : 3.9 - 5.9 N.m (40 - 60 Kgf.cm)

(8) Hex socket head bolts M6x18 (1 pc.) joining connecting rod with crank shaft : 13 - 16 N.m (130 - 160 Kgf.cm)

(9) Crank cap (1 pc.)
to be screwed into crank housing : 10 - 15 N.m (100 - 150 Kgf.cm)

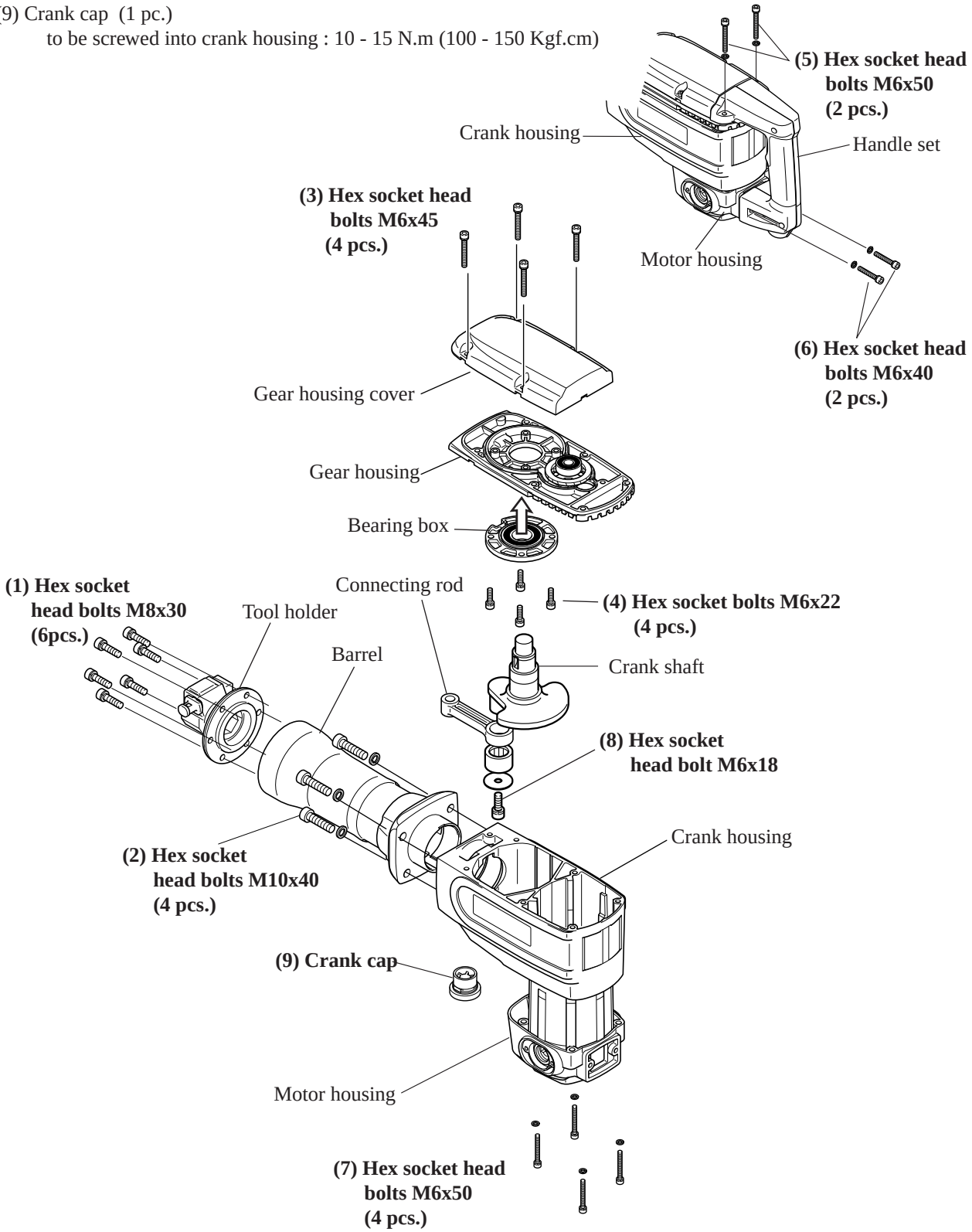

► Circuit diagram

Color index of lead wires	
Black	
White	
Orange	
Purple	

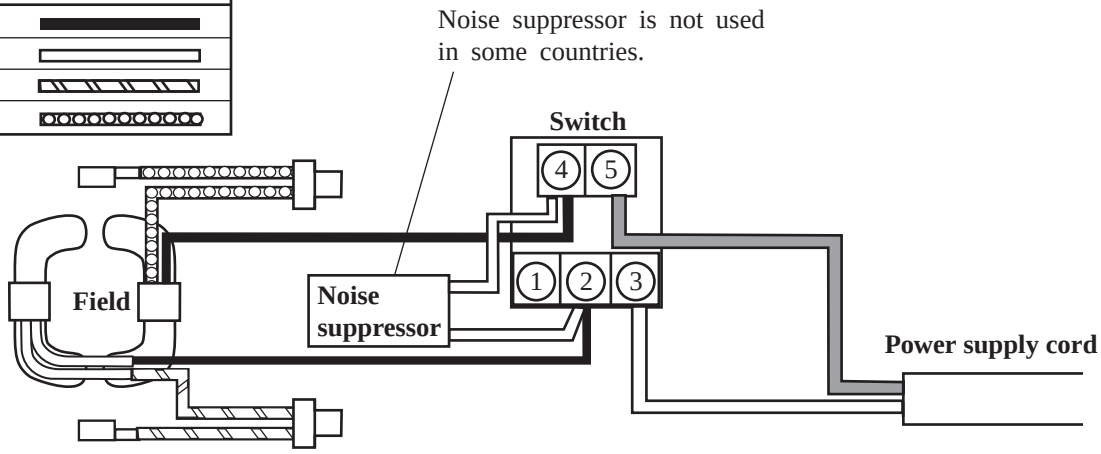

► Wiring diagram

Inside of motor housing

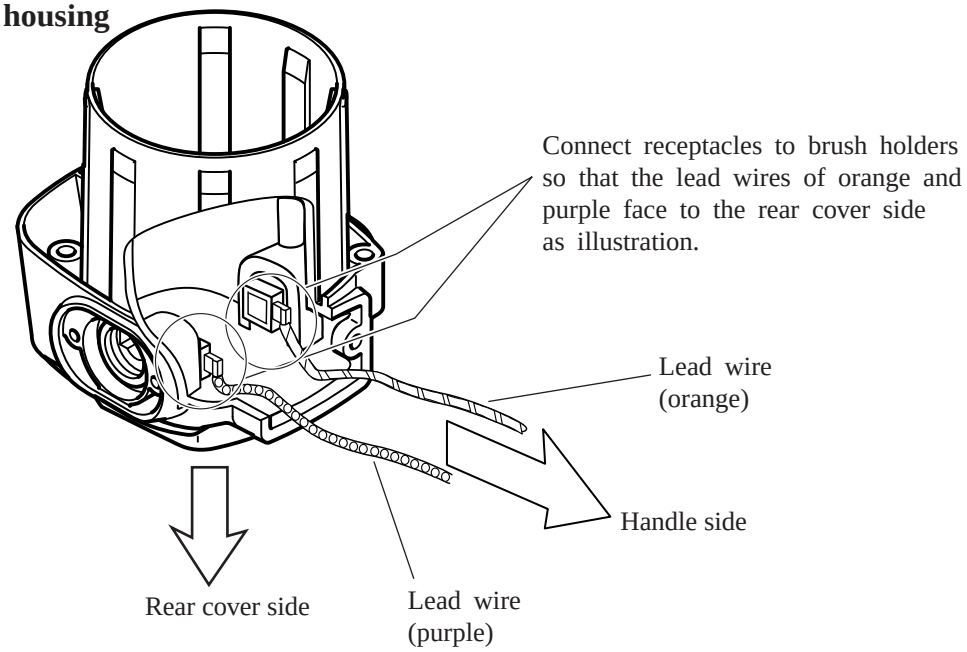
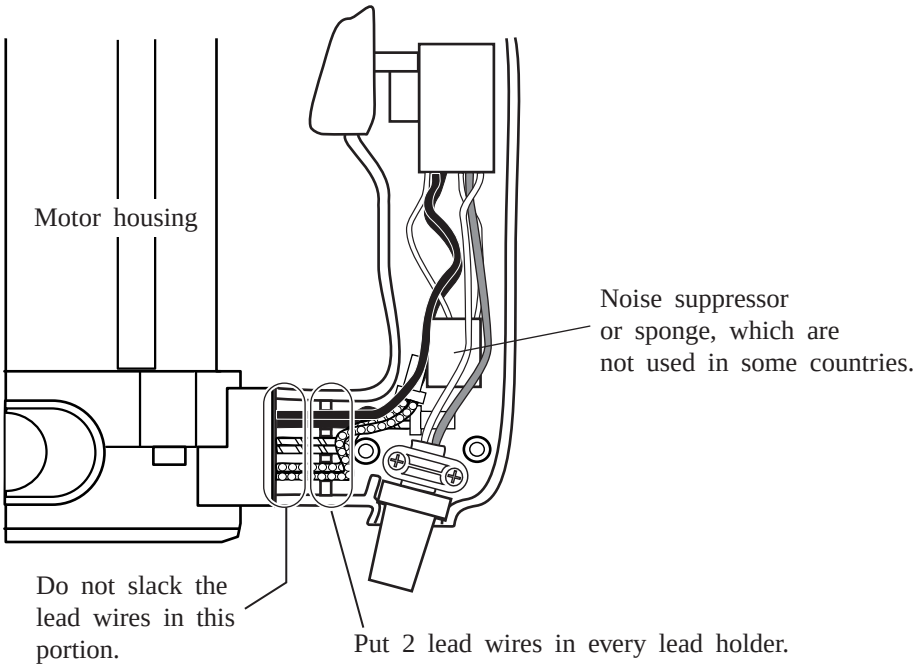
Handle section