Model No.DLM380 380MM CORDLESS LAWN MOWER

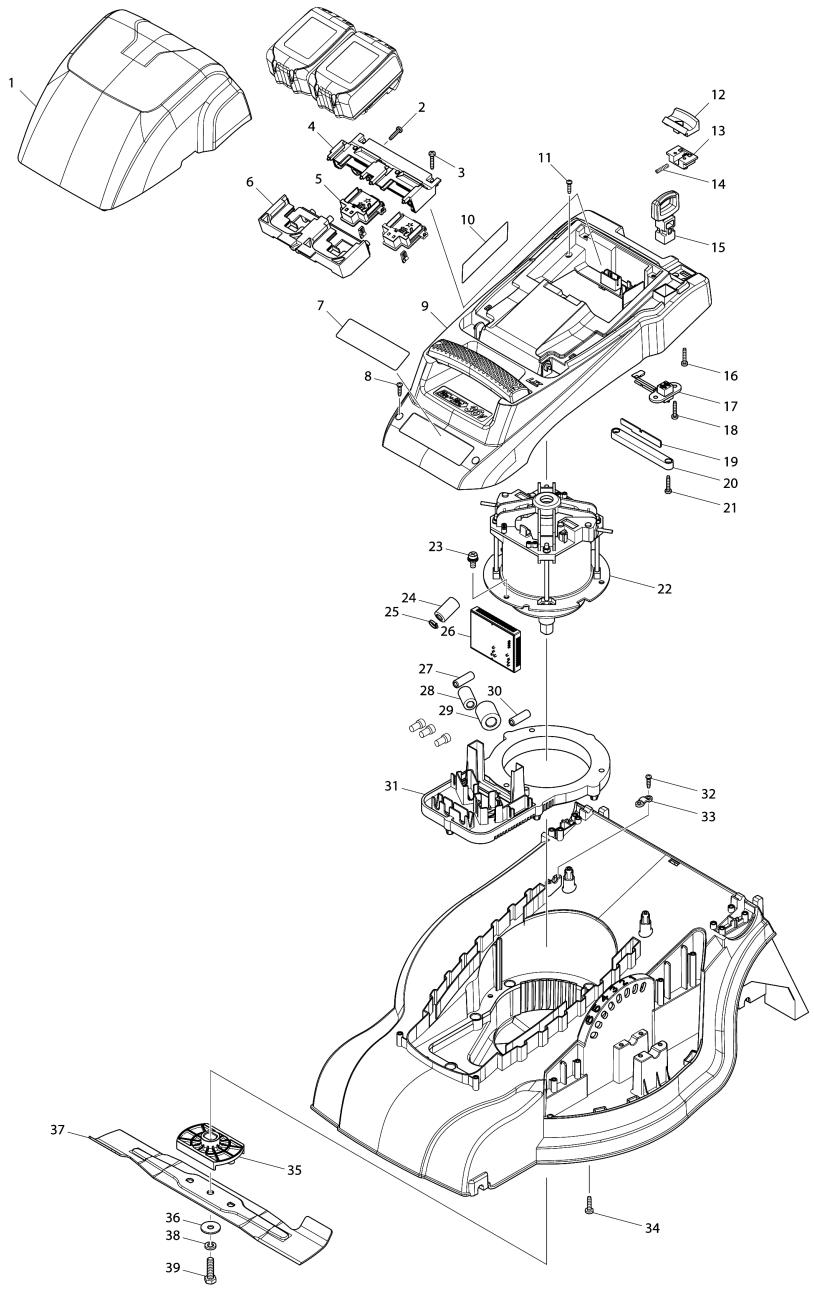

Model No.DLM380 380MM CORDLESS LAWN MOWER

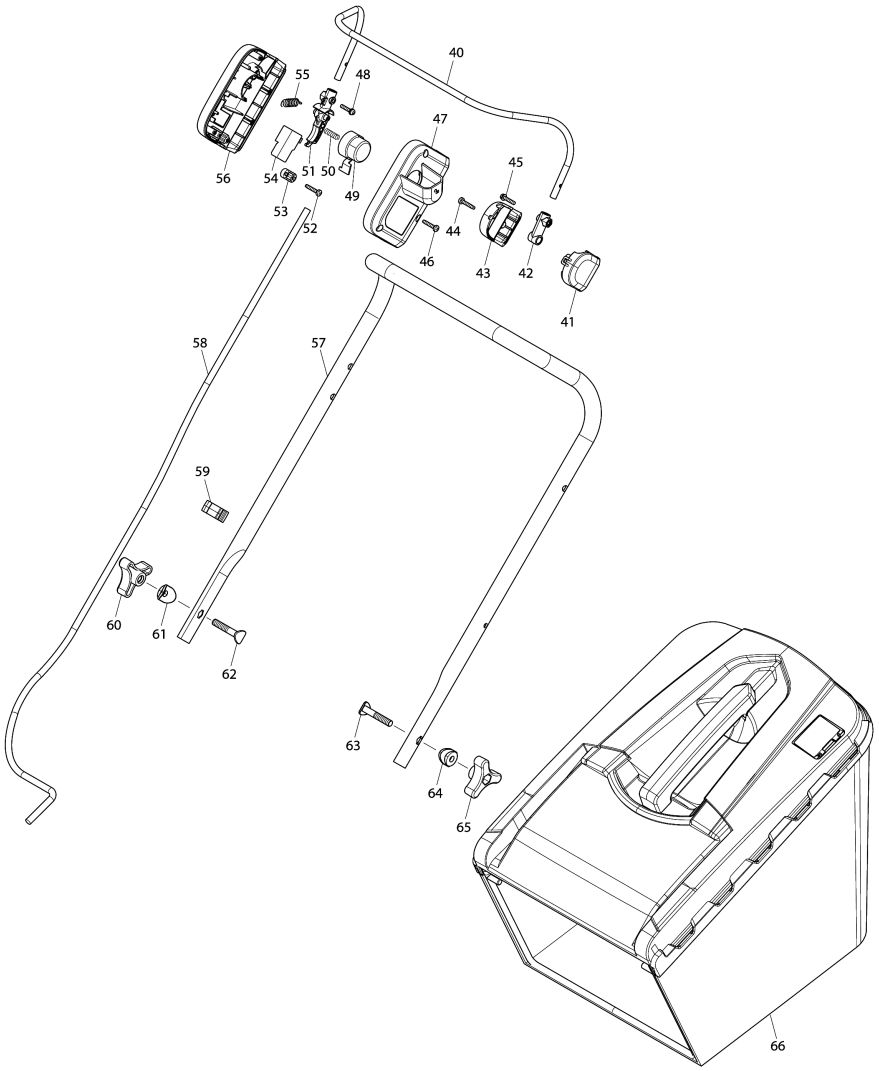

Model No.DLM380 380MM CORDLESS LAWN MOWER

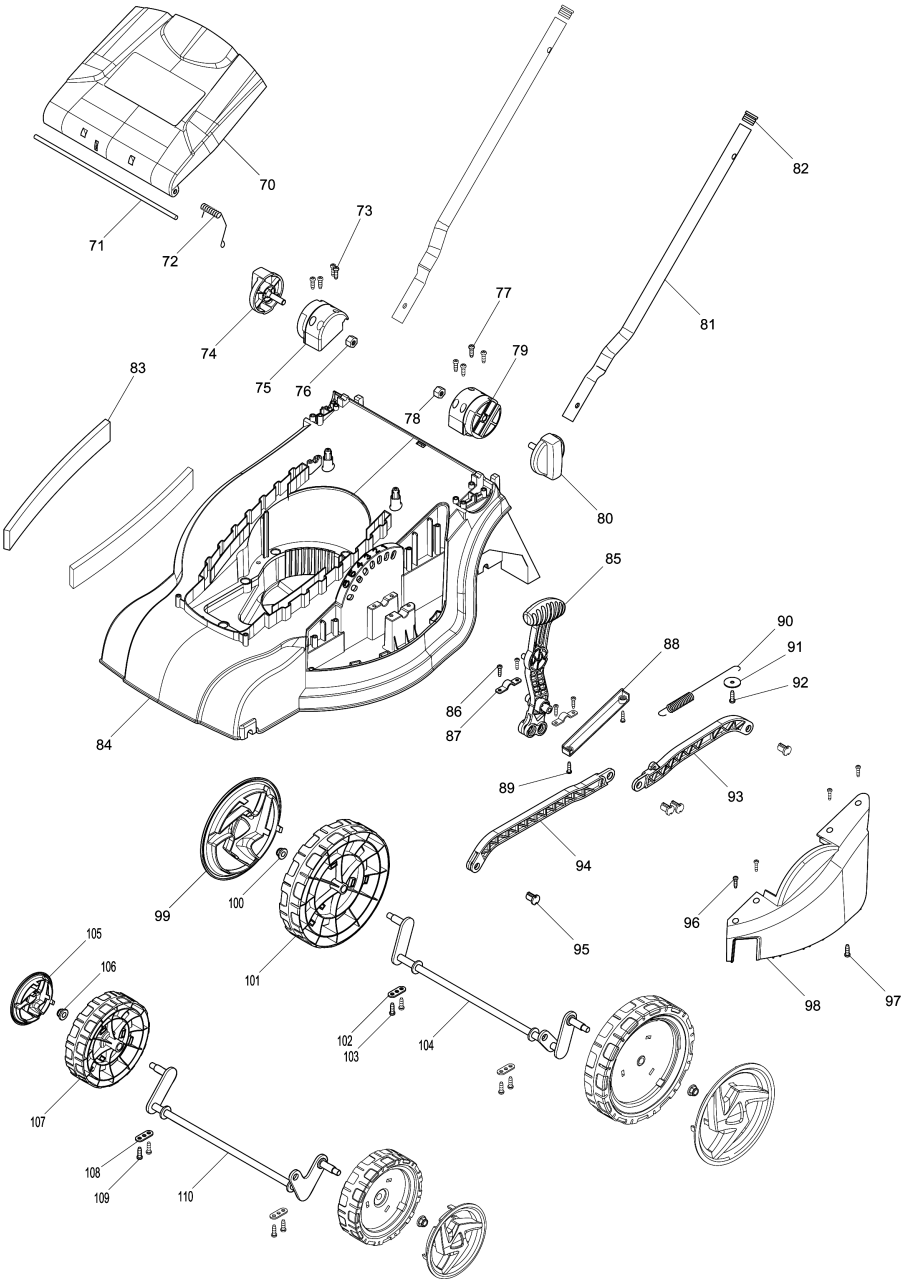

Model No.DLM380 380MM CORDLESS LAWN MOWER

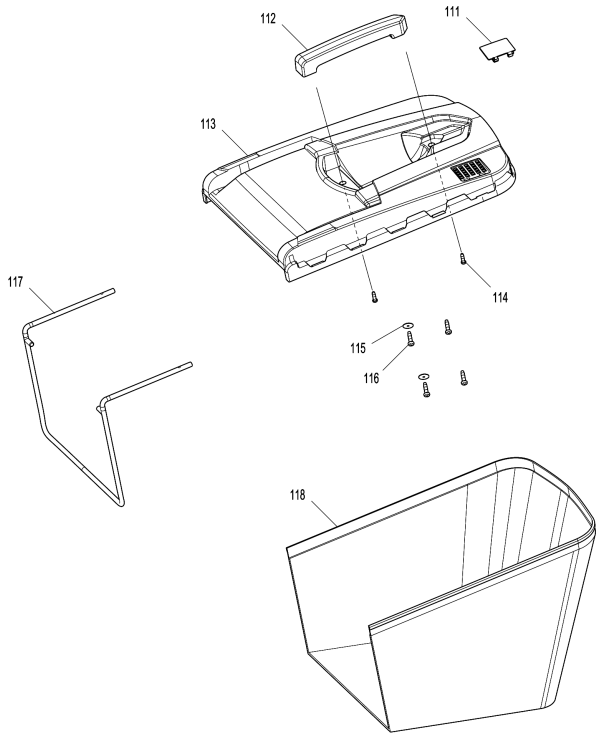

Model No.DLM380 380MM CORDLESS LAWN MOWER

Артикул	Детали	Описание	Замена	Количество	New/Old	Продажи	Закупка	Примечание
001	142585-1	BATTERY COVER COMPLETE E		1				
C10	263005-3	Резиновая шпилька 6		1				
C20	890380-0	CAUTION LABEL		1				
002	266424-2	Самонарезающий винт 4X20		3				
003	266424-2	Самонарезающий винт 4X20		3				
004	187926-4	TERMINAL HOUSING SET		1				
C10	263005-3	Резиновая шпилька 6		4				
D10		INC. 6						
005	644808-8	Предохранитель		2				
006	187926-4	TERMINAL HOUSING SET		1				
C10	263005-3	Резиновая шпилька 6		4				
D10		INC. 4						
007	803J08-1	MAKITA LOGO LABEL		1				
008	266890-3	TAPPING SCREW 4X16		2				
009	142591-6	COWLING COMPLETE		1				
010	815M03-7	DLM380 NAME PLATE		1				
011	266890-3	TAPPING SCREW 4X16		2				
012	453250-0	LOCK LEVER		1				
013	453251-8	LOCK LEVER SUPPORT		1				
014	233173-6	Компрессионная пружина 4		1				
015	643890-4	KEY		1				
016	266424-2	Самонарезающий винт 4X20		2				
017	638946-6	LEAD UNIT		1				
018	266424-2	Самонарезающий винт 4X20		2				
019	620278-5	LED CIRCUIT		1				
020	455070-8	LED COVER		1				
021	266424-2	Самонарезающий винт 4X20		2				
022	629118-4	DC MOTOR		1	*			
022-1	629433-6	DC MOTOR	S	1				
023	266892-9	+ PAN HEAD SCREW M6X16 WITH WR		3	*			
023-1	265A53-4	+ PAN HEAD SCREW M6X22 WITH WR	S	3				
024	688162-0	LINE FILTER		1				
025	687010-0	Ремешок для 4110C/9077/9402/		1				
026	620277-7	CONTROLLER		1				
027	688165-4	Фильтр MT081		1				
028	688162-0	LINE FILTER		1				
029	688140-0	LINE FILTER		1				
030	688165-4	Фильтр MT081		1				
031	455064-3	MOTOR BRACKET		1				
032A	266890-3	TAPPING SCREW 4X16		2	*			
032B	266890-3	TAPPING SCREW 4X16		2	*			
032-1A	266424-2	Самонарезающий винт 4X20	S	2				
032-1B	266424-2	Самонарезающий винт 4X20	S	2				
032-1C	266424-2	Самонарезающий винт 4X20		2				
033	687A88-9	CORD CLAMP		1				
034	266420-0	Винт (+) M5X20		6				
035	455130-6	BLADE SUPPORT		1				
036	253852-0	Плоская шайба 8		1				
037	196863-1	BLADE 380 SET		1				
038	942201-3	Шайба Гровера 8 к 2412N/2414B/		1				
039	266889-8	HEX BOLT M8X30		1				

Please order the parts with part number.

Print Date 9/10/2020

Model No.DLM380 380MM CORDLESS LAWN MOWER

Артикул	Детали	Описание	Замена	Количество	New/Old	Продажи	Закупка	Примечание
040	332106-9	SWITCH LEVER		1				
041	455076-6	SWITCH LEVER CASE		1				
042	455078-2	ARM		1				
043	455077-4	SWITCH LEVER CASE COVER		1				
044	266424-2	Самонарезающий винт 4X20		1				
045	911138-5	Винт M4X20 к 1002BA/1100/1901/		1				
046	266424-2	Самонарезающий винт 4X20		4				
047	455073-2	SWITCH BOX COVER		1				
048	911138-5	Винт M4X20 к 1002BA/1100/1901/		1				
049	455074-0	SWITCH BUTTON		1				
050	233068-3	Компрессионная пружина 6		1				
051	455075-8	LEVER		1				
052	266424-2	Самонарезающий винт 4X20		2				
053	687124-5	Держатель кабеля к 3709/MT360/		1				
054	650730-9	SWITCH TG72BD-6		1				
055	231876-6	TENSION SPRING 9		1				
056	455072-4	SWITCH BOX		1				
057	332109-3	UPPER HANDLE		1				
058	660480-8	POWER SUPPLY CORD #16-3-0.95		1				
059	455071-6	CORD HOLDER		1				
060	252657-5	THUMB NUT M8		1				
061	455131-4	CURL WASHER 8		1				
062	266893-7	FLAT HEAD BOLT M8X45		1				
063	266893-7	FLAT HEAD BOLT M8X45		1				
064	455131-4	CURL WASHER 8		1				
065	252657-5	THUMB NUT M8		1				
066	126429-3	GRASS CATCHER ASSEMBLY M		1				
070	DA00000348	REAR COVER ASSEMBLY		1				
071	DA00000332	REAR FLAP HINGE ROD		1				
072	DA00000352	REAR FLAP TORSION SPRING		1				
073	DA00000326	TAPPING SCREW ST5X16		4				
074A	DA00000327	THUMB SCREW M8		1	*			
074B	DA00000327	THUMB SCREW M8		1	*			
074-1A	DA00001237	THUMB SCREW M8	X	1				
074-1B	DA00001237	THUMB SCREW M8	X	1				
074-1C	DA00001237	THUMB SCREW M8		1				
075	DA00000350	RIGHT FIXING BOARD OF HANDLE		1				
076	DA00000343	HEXAGON NUT		1				
077	DA00000326	TAPPING SCREW ST5X16		4				
078	DA00000343	HEXAGON NUT		1				
079	DA00000344	LEFT FIXING BOARD OF HANDLE		1				
080A	DA00000327	THUMB SCREW M8		1	*			
080B	DA00000327	THUMB SCREW M8		1	*			
080-1A	DA00001237	THUMB SCREW M8	X	1				
080-1B	DA00001237	THUMB SCREW M8	X	1				
080-1C	DA00001237	THUMB SCREW M8		1				
081	DA00000345	LOWER HANDLE BAR		2				
082	DA00000346	PIPE PLUG		2				
083	DA00000354	AIR FILTER		2				
084A	DA00000334	DECK		1	*			
084B	DA00000334	DECK		1	*			
084-1A	DA00000778	DECK	<	1	*			
084-1B	DA00000778	DECK	<	1	*			

Please order the parts with part number.

Print Date 9/10/2020

Model No.DLM380 380MM CORDLESS LAWN MOWER

Артикул	Детали	Описание	Замена	Количество	New/Old	Продажи	Закупка	Примечание
084-2A	DA00001245	DECK	S	1				
084-2B	DA00001245	DECK	S	1				
084-2C	DA00001245	DECK		1				
085	DA00000339	HEIGHT ADJUSTMENT HANDLE		1				
086	266890-3	TAPPING SCREW 4X16		4				
087	DA00000338	RETAINER		2				
088	DA00000337	GRASS-PROOF STRAP		1				
089	266890-3	TAPPING SCREW 4X16		2				
090	DA00000353	HEIGHT ADJUST SUPPORT SPRING		1				
091	DA00000347	WASHER		1				
092	DA00000326	TAPPING SCREW ST5X16		1				
093	DA00000341	HEIGHT ADJUST RINK ROD REAR		1				
094	DA00000340	HEIGHT ADJUST RINK ROD FRONT		1				
095	DA00000333	CONNECTION ROD PIN		4				
096	266890-3	TAPPING SCREW 4X16		4				
097	DA00000326	TAPPING SCREW ST5X16		1				
098	DA00000351	SIDE DISCHARGE COVER OF DECK		1				
099	DA00000331	7.5″ WHEEL COVER		2				
100	DA00000342	HEXAGON LOCKING NUT		2				
101	DA00000330	7.5″ WHEEL ASSEMBLY		2				
102A	DA00000335	RETAINER PLATE		2	*			
102B	DA00000335	RETAINER PLATE		2	*			
102-1A	161373-7	PLATE	<	1				
102-1B	161373-7	PLATE	<	1				
102-1C	161373-7	PLATE		1				
103	DA00000326	TAPPING SCREW ST5X16		4				
104	DA00000349	REAR AXLE		1				
105	DA00000329	5.5″ WHEEL COVER		2				
106	DA00000342	HEXAGON LOCKING NUT		2				
107	DA00000328	5.5″ WHEEL ASSEMBLY		2				
108	DA00000335	RETAINER PLATE		2				
109	DA00000326	TAPPING SCREW ST5X16		4				
110	DA00000336	FRONT AXLE		1				
111	DA00000360	LEVEL INDICATOR		1				
112	DA00000359	GRASS CATCHER HANDLE		1				
113	DA00000362	GRASS CATCHER UPPER BORAD		1				
114	DA00000326	TAPPING SCREW ST5X16		2				
115	DA00000361	PRESSING PLATE		2				
116	266890-3	TAPPING SCREW 4X16		4				
117	DA00000358	GRASS CATCHER FRAME		1				
118	DA00000357	GRASS CATCHER		1				
125	684062-2	VINYL TUBE 5.2-150	S	2	*			
125-1	684641-6	VINYL TUBE 8.38-150	O	2				
A01	782016-4	OFFSET WRENCH 13		1				
A02B	***DC18RC	DC18RC FAST CHARGER		1	*			
A02-1B	***DC18RC	DC18RC FAST CHARGER	<	1				
A02-1C	***DC18RD	DC18RD TWO PORT FAST CHARGER		1				
A03B	196015-4	BATTERY BL1830 SET		2	*			
A03-1B	196015-4	BATTERY BL1830 SET	O	2	*			
A03-2B	197600-6	BATTERY BL1830B SET	<	2	*			
A03-2C	197265-4	BATTERY BL1840B SET		2	*			
A03-3B	197599-5	BATTERY BL1830B SET	<	2	*			
A03-3C	197265-4	BATTERY BL1840B SET	O	2				
A03-4B	197599-5	BATTERY BL1830B SET	O	2				

Please order the parts with part number.

Print Date 9/10/2020

Model No.DLM380 380MM CORDLESS LAWN MOWER

Артикул	Детали	Описание	Замена	Количество	New/Old	Продажи	Закупка	Примечание
A04B	450128-8	Крышка аккумулятора для BTM40		2	*			
E01	800A20-8	SOUND 94DB LABEL		1	*			
E01-1	819M65-7	SOUND 91DB LABEL	<	1				
E02	890374-5	INDICATION LABEL		1				
E03	803J02-3	CAUTION LABEL		1				

Please order the parts with part number.

Print Date 9/10/2020