TECHNICAL INFORMATION

Models No. ► MT242

Description ► 355mm (14") Portable Cut-Off

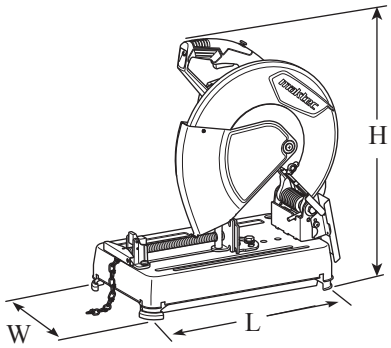

Dimensions: mm (")	
Length (L)	500 (19-3/4)
Width (W)	280 (11)
Height (H)	640 (25-1/4)

CONCEPT AND MAIN APPLICATIONS

Model MT242 has been developed based on current model MT241 to comply with the new EU standards (EN61029-2-10: 2010).

The safety cover, safety guard, spark guard, base, guide plate and vise plate are redesign of those of MT241.

► Specification

Voltage (V)	Current (A)	Cycle (Hz)	Continuous Rating (W)		Max. Output(W)
			Input	Output	
110	15.0	50/60	1,650	900	2,500
120	15.0	50/60	---	900	2,500
220	9.6	50/60	2,000	1,400	3,000
230	9.2	50/60	2,000	1,400	3,000
240	8.8	50/60	2,000	1,400	3,000

No load speed: $min.^{-1}$= rpm		3,800
Wheel size: mm (")	Diameter	355 (14)
	Arbor	25.4 (1)
	Thickness	3 (1/8)
Weight according to EPTA-Procedure 01/2003*1: kg (lbs)		17.8 (39.2)
Power supply cord: m (ft)		3.0 (9.8)

Capacity: mm (")

Form of materials D: Diameter W: Width H: Height S: Side T: Thickness	Miter angle	90°	45°
	D	ø115 (4-1/2)	ø115 (4-1/2)
	W, H — H x W	102 (4) x 194 (7-5/8) 70 (2-3/4) x 233 (9-1/8)	115 (4-1/2) x 103 (4-1/16)
	W, H — H x W	119 (4-11/16) x 119 (4-11/16)	106 (4-3/16) x 106 (4-3/16)
	S, S, T — S x S T	137 (5-3/8) x 137 (5-3/8) 10 (3/8)	100 (4) x 100 (4) 10 (3/8)

***1** with Abrasive cut-off wheel 355

► Standard equipment

Socket wrench 17 1
Abrasive cut-off wheel 355 1

Note: The standard equipment for the tool shown may vary by country.

► Optional accessories

No

Repair

CAUTION: Repair the machine in accordance with "Instruction manual" or "Safety instructions".

[1] NECESSARY REPAIRING TOOLS

Code No.	Description	Use for
1R003	Retaining ring pliers ST-2N	removing Pipe 20-128
1R269	Bearing extractor	removing Ball bearing 6000ZZ from Spindle

[2] LUBRICATIONS

Apply the following grease to the portions pointed with triangles to protect parts and product from unusual abrasion.

Item No.	Description	Portion to lubricate	Lubricant	Amount
(16)	Ring 17	Outside where Safety cover contacts	Makita Grease N No.1	a little
(57)	Gear housing complete	(57a) Surface where (86) Base contacts		2 g
		(57b) Gear room where Helical gear 49 rotates		25 g
(86)	Base	Punched hole for Pipe 20-128 passing		a little

Fig. 1

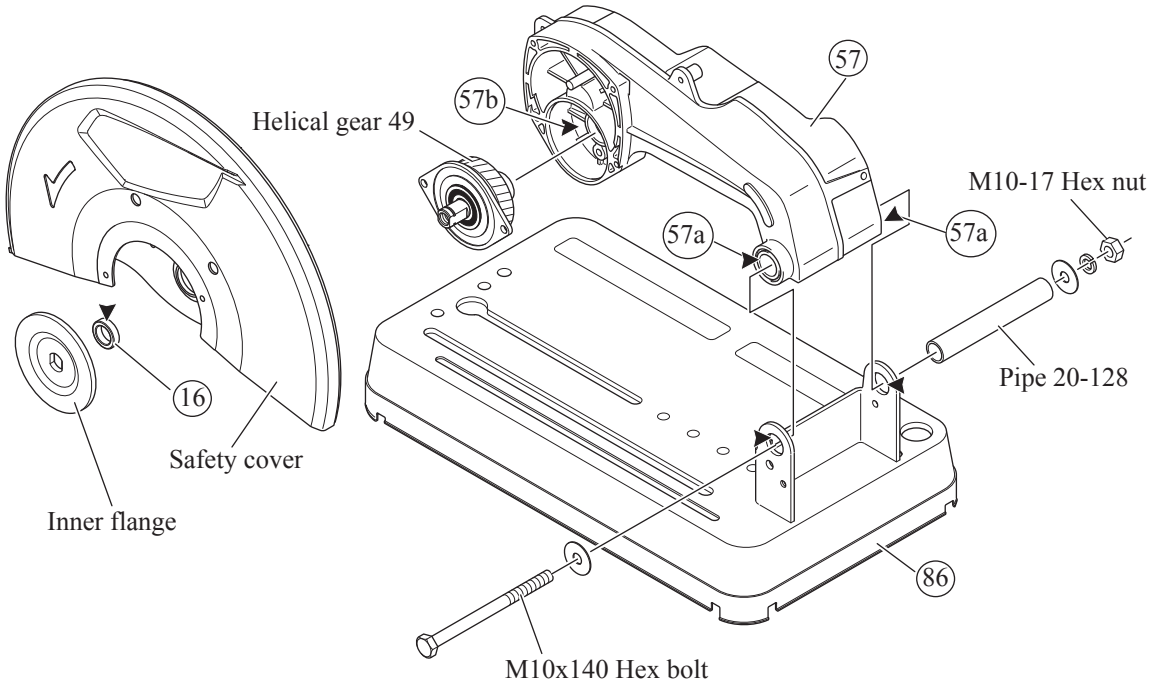

Repair

[3] DISASSEMBLY/ASSEMBLY

[3] -1. Armature

DISASSEMBLING

Armature can be removed as drawn in **Fig. 2**.

Fig. 2

1. Remove Brush holder caps and Carbon brushes from the machine.

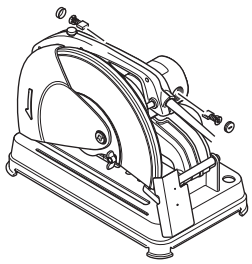

2. Separate Motor housing together with Handle by unscrewing seven M5x40 Pan head screws.

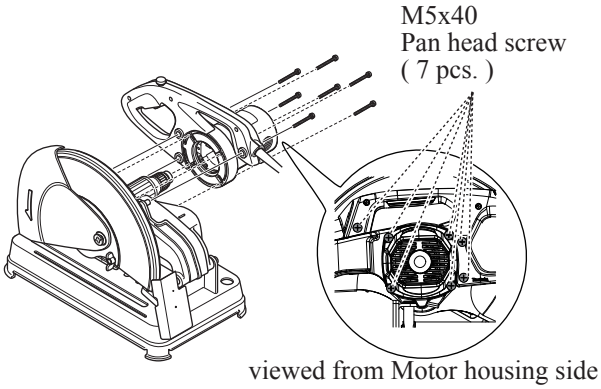

3. Remove Armature from Gear housing.

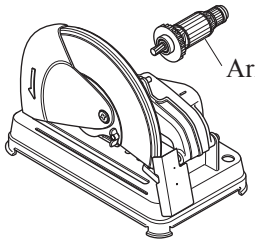

4. Armature can be now disassembled.

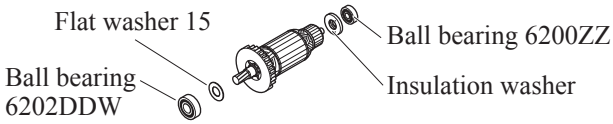

ASSEMBLING

Assemble Armature by reversing the Disassembly procedure. (Refer to **Fig. 2**)

[3] -2. Helical Gear 49

DISASSEMBLING

1. Remove Safety cover section as drawn in **Fig. 3**.

Fig. 3

1. Unscrew M6x12 Thumb screw and open Center cover together with Safety guide.
And then remove M10x25 Hex bolt, Flange 90 (2pcs.), Cut-off wheel, O ring 14 and Ring 17 from the machine.

2. Remove Safety cover section (including Safety guide and Center cover) from Gear housing by unscrewing four M5x20 Pan head screws.
And then remove Ring 17 from Spindle.

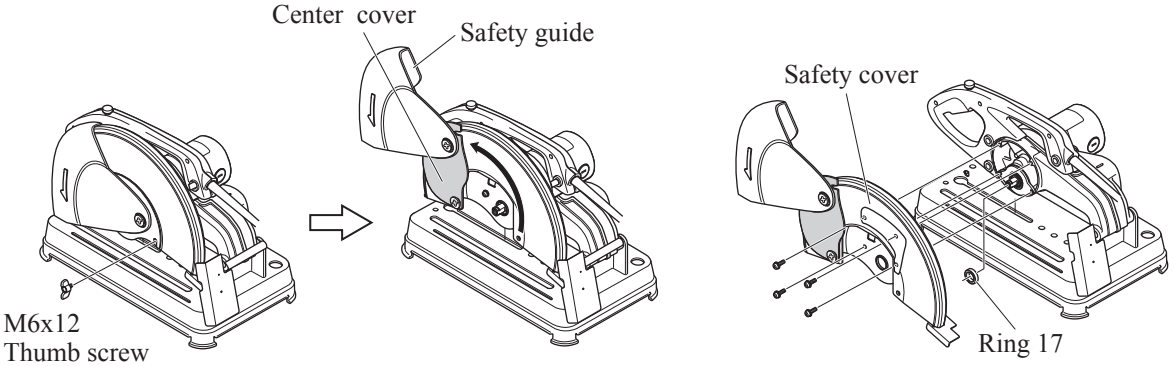

Repair

[3] DISASSEMBLY/ASSEMBLY
[3] -2. Helical Gear 49 (cont.)

DISASSEMBLING

2. Separate Gear section from Gear housing, and disassemble the removed Gear section as drawn in **Fig. 4**.

Fig. 4

1. Remove Gear section (including Bearing box, Spindle and Ball bearings) from Gear housing.

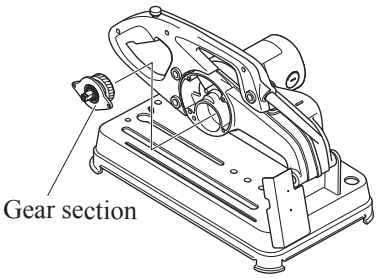

2. Remove Spindle together with Ball bearing 6000ZZ from Bearing box with Arbor press.

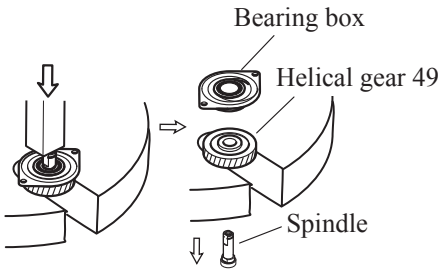

3. Remove Ball bearing 6000ZZ from Spindle with 1R269.

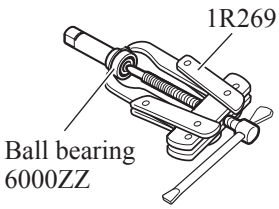

ASSEMBLING

Assemble by reversing the disassembly procedure. (Refer to **Figs. 4** and **3**)

Note: 1. Assemble Spindle to Helical gear 49 as drawn in **Fig. 5**.

2. Do not forget to mount Ring 17 to Spindle when assembling Safety cover section to Gear housing. (Refer to the **right** illustration in **Fig. 3**)

3. Do not forget to mount another Ring 17 and O ring 14 between Inner and Outer flanges. (**Fig. 6**)

Fig. 5

Press-fit Spindle to Helical gear 49 while aligning the flat portion of Spindle with the flat portion of the gear.

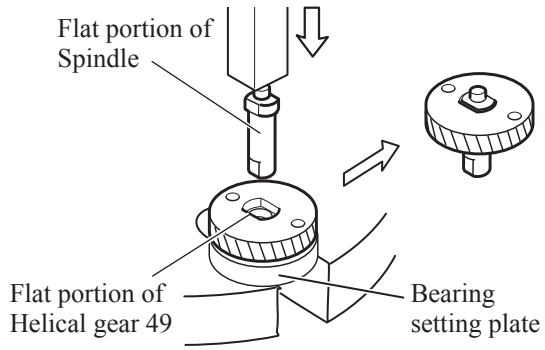

Fig. 6

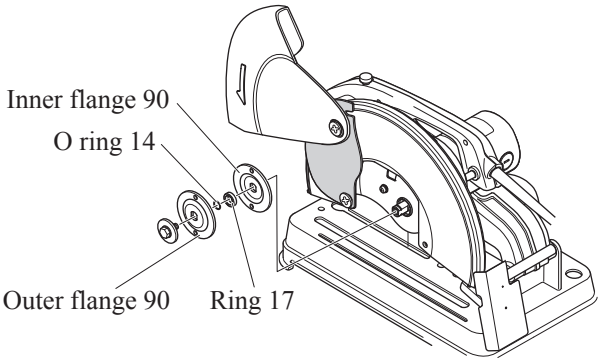

Repair

[3] DISASSEMBLY/ASSEMBLY

[3] -3. Vise Section

DISASSEMBLING

Vise section is fixed to Base as follows.

* at Screw guide with two M8x30 Pan head screws
* by interlocking of Shoulder pin 10-16 with the guide groove on Base

(1) Make Screw guide free from Base by unscrewing two M8x30 Pan head screws.
(2) Separate Vise screw from Vise plate. And remove Shoulder pin 10-16. (**Fig. 7)**

Fig. 7

1. Remove M8x30 Pan head screws (2pcs.) and Chain.

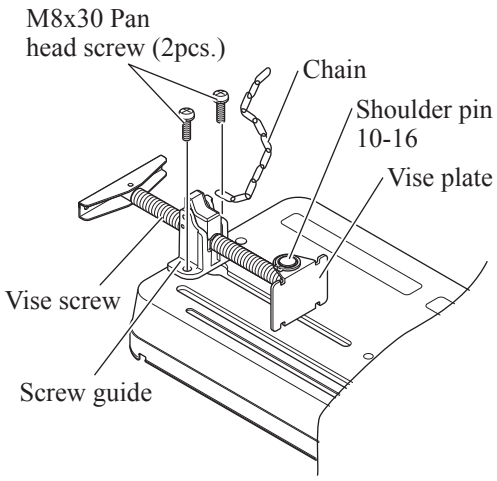

2. Remove Retaining ring S-16 from Shoulder pin 10-16.

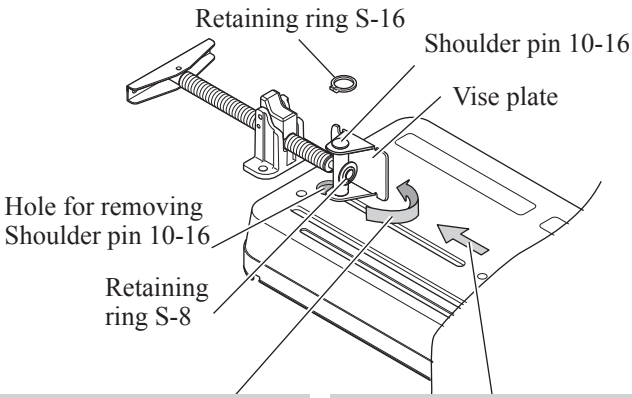

3. Turn Vise plate to the position where Retaining ring S-8 can be easily removed.

4. Push Vise plate to the hole for the removing Shoulder pin 10-16.

5. Separate Vise screw section from Vise plate by removing Retaining ring S-8.

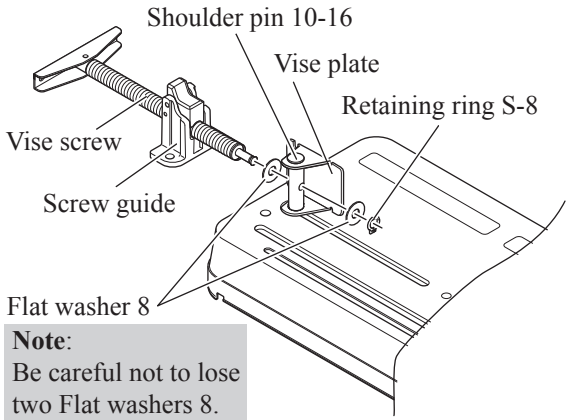

Note:
Be careful not to lose two Flat washers 8.

6. Shoulder Pin 10-16 is removed through the hole for the removing Shoulder pin 10-16.

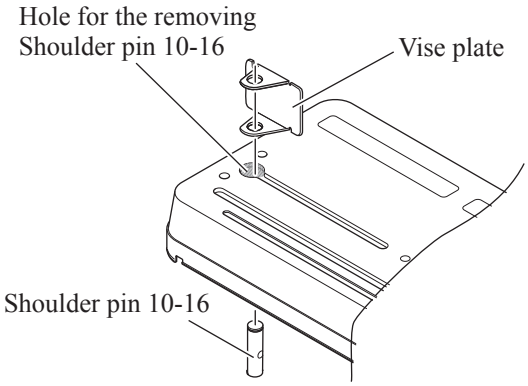

Repair

[3] DISASSEMBLY/ASSEMBLY

[3] -3. Vise Section (cont.)

ASSEMBLING

Assemble by reversing the Disassembly procedure. (Refer to **Fig. 7)**
Note: Chain has to be fixed to Screw guide on the side where the projection on Screw guide is furnished. (**Fig. 8)**

Fig. 8

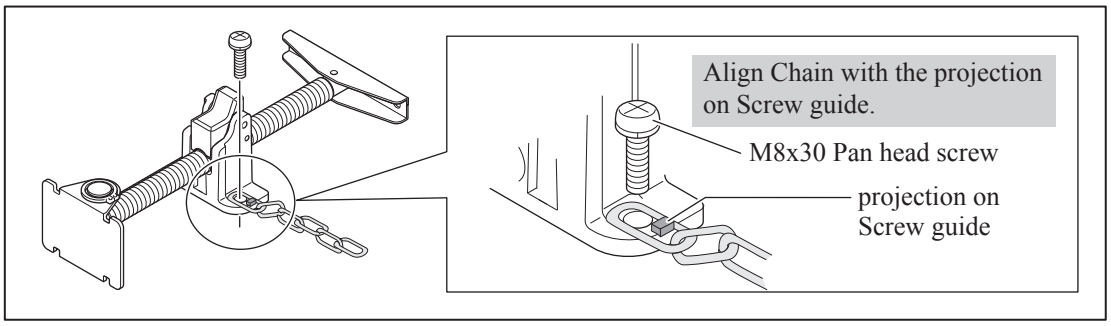

[3]-4. Base

DISASSEMBLING

Remove Safety cover section as drawn in **Fig. 3**, and then disassemble Base from Motor unit. **(Figs. 9, 10 and 11)**

Fig. 9

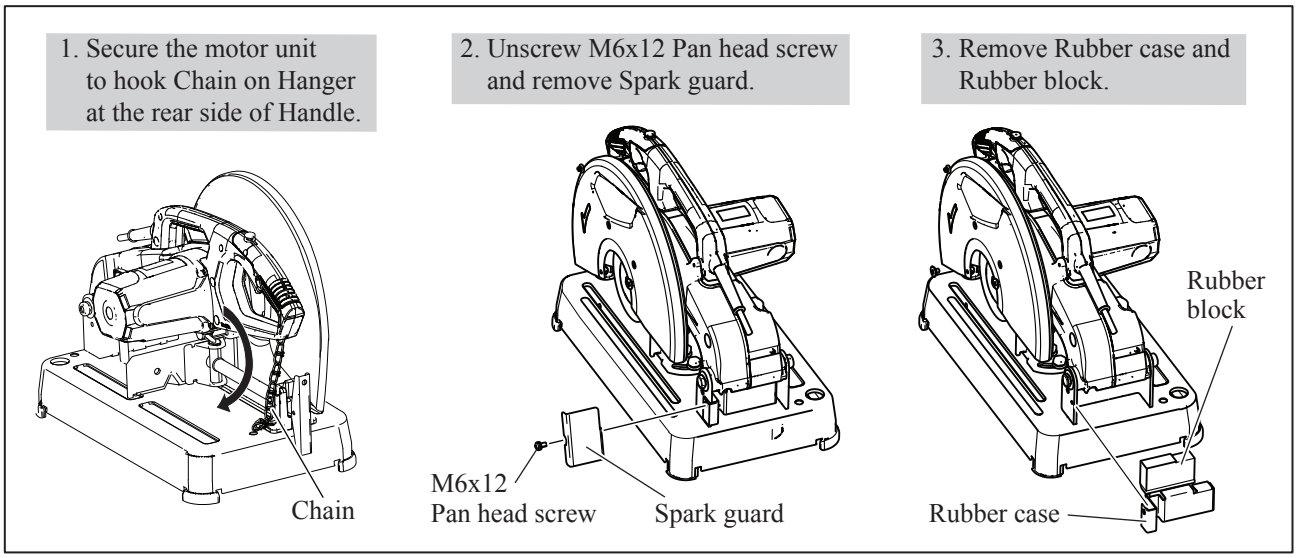

Fig. 10

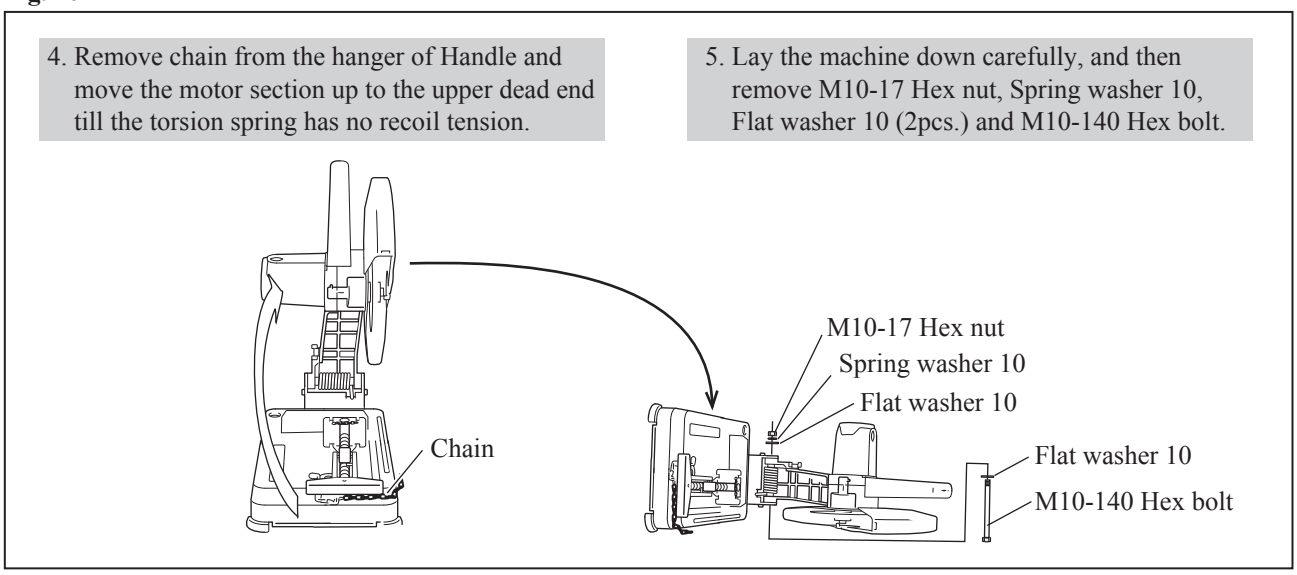

Repair

[3] DISASSEMBLY/ASSEMBLY

[3]-4. Base (cont.)

DISASSEMBLING

Fig. 11

6. Insert 1R003 into Pipe 20-128 and open it fully in the pipe to grip its internal surface. And pull out the pipe while twisting them.

7. Remove Torsion spring 24. Now Motor unit is separated from Base.

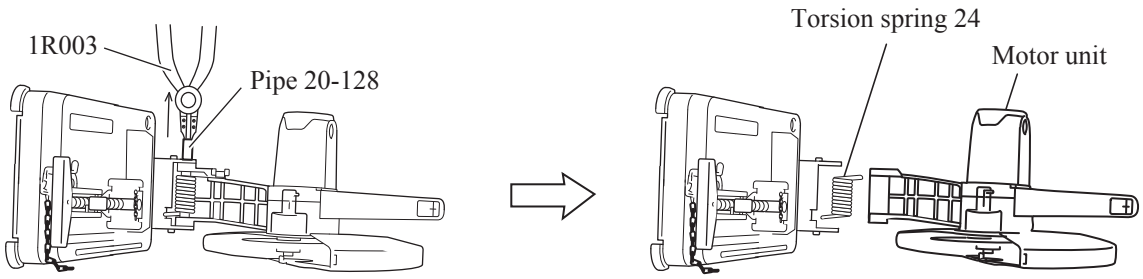

ASSEMBLING

Assemble by reversing the disassembly procedure. (Refer to **Figs. 11**, **10 and 9**)
Note: Assemble Rubber block to Rubber case. (**Fig. 12)**

Fig. 12

Fit Rubber block to the inside of Rubber case. And then assemble them to Base. Refer to the **right** illustration in **Fig. 9**.

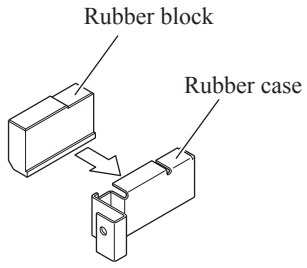

Circuit diagram

Fig. D-1

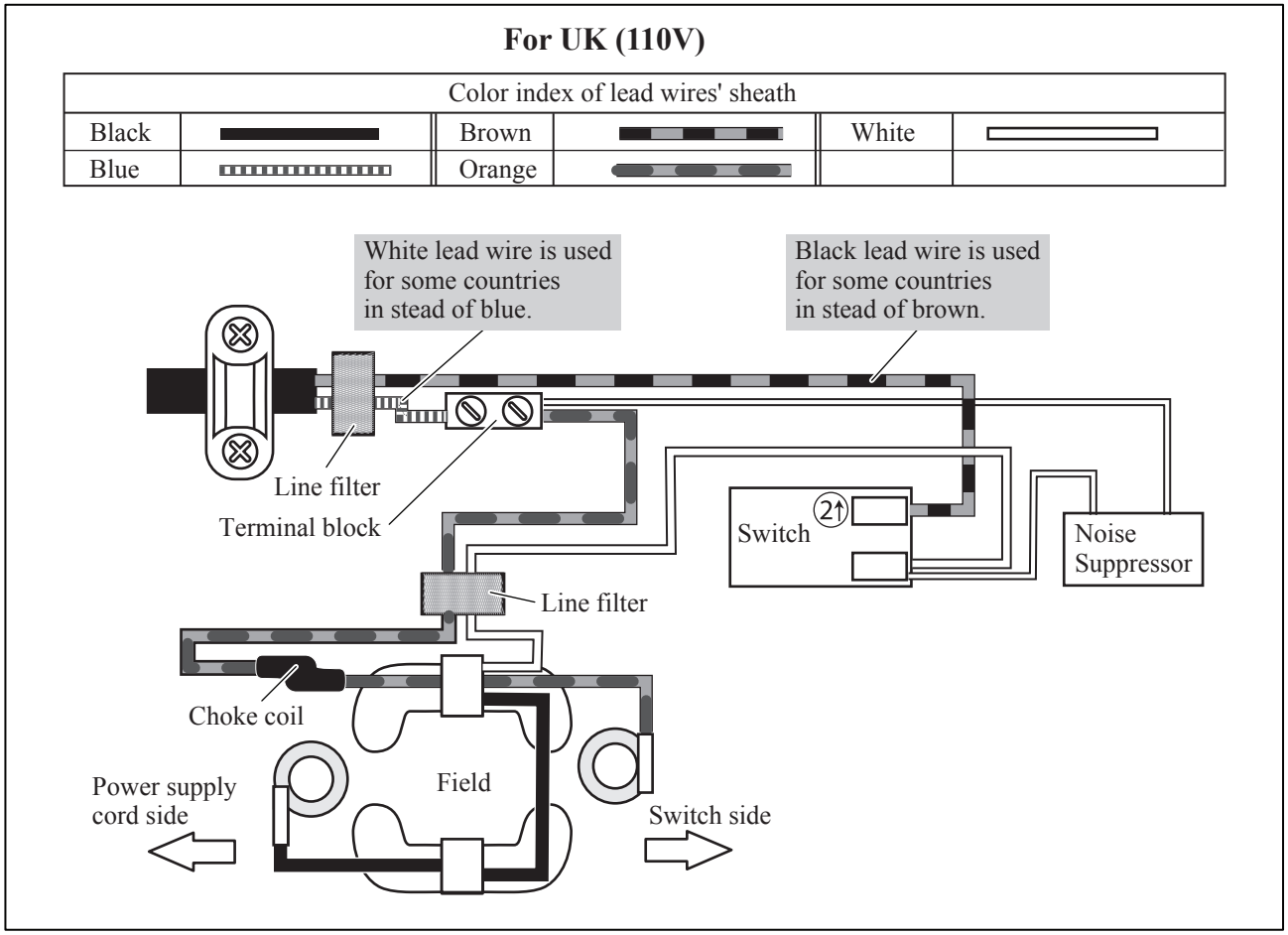

Wiring diagram

Fig. D-2

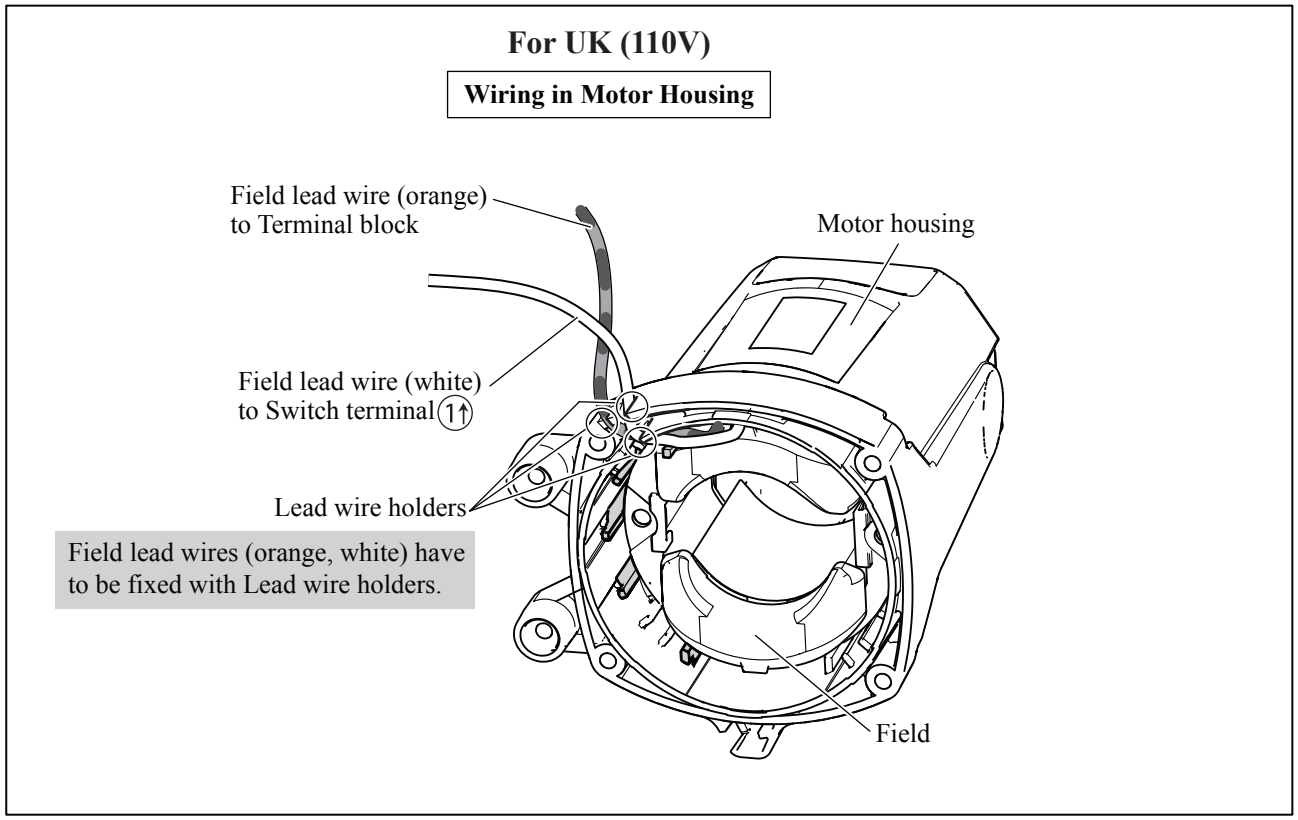

Circuit diagram

Fig. D-1A

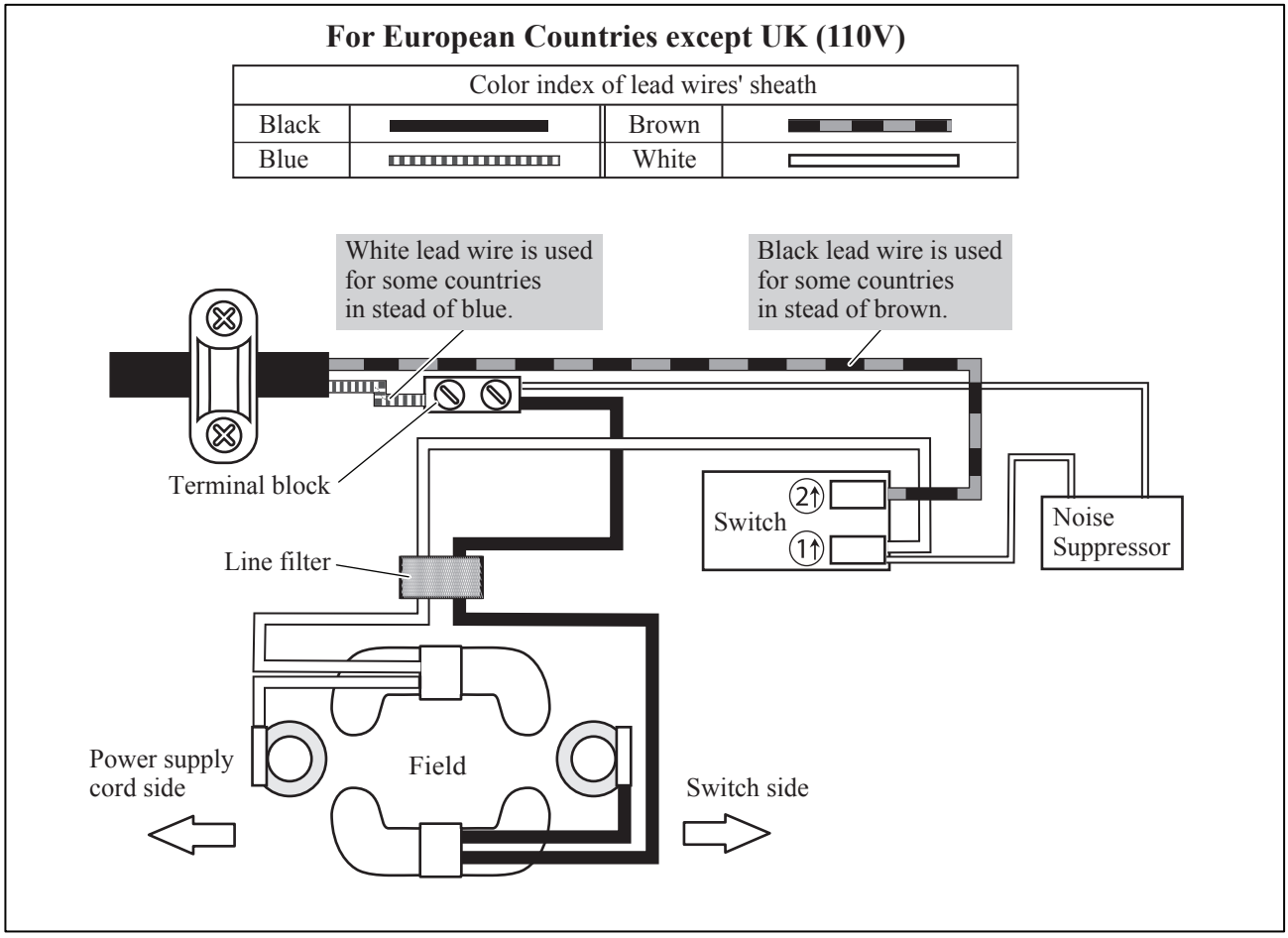

Wiring diagram

Fig. D-2A

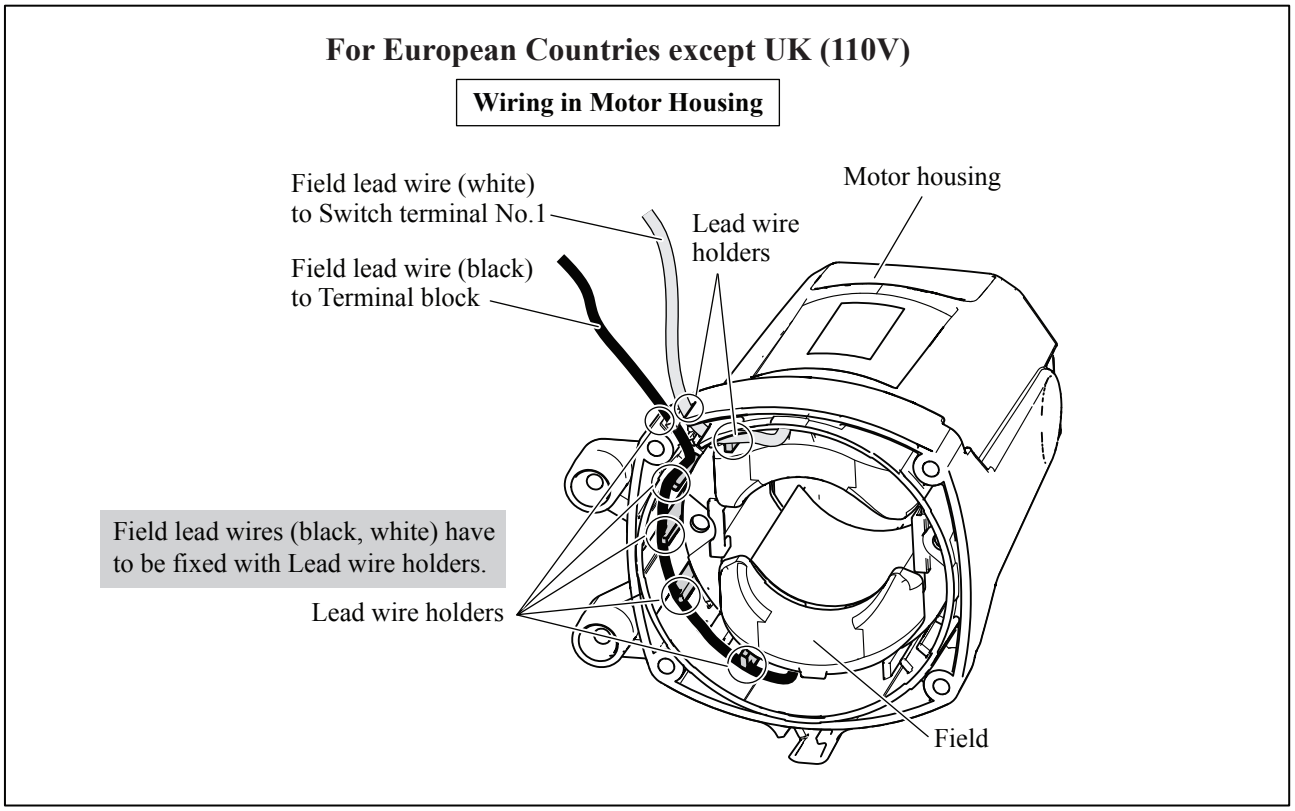

Wiring diagram

Fig. D-3

