TECHNICAL INFORMATION

Model No. ► MT922

Description ► Random Orbit Sander 125mm (5")

CONCEPT AND MAIN APPLICATIONS

Model MT922 has been developed as a cost-competitive maktec random orbit sander without built-in dust extraction.
Its main features are:

- Ergonomically designed palm grip for comfortable handling
- Industrial performance and durability at less expense

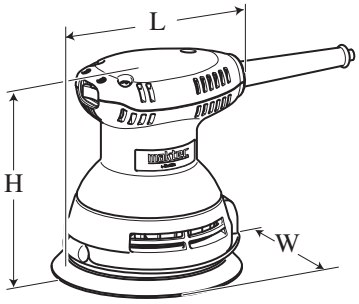

Dimensions: mm (")	
Length (L)	127 (5)
Width (W)	123 (4-7/8)
Height (H)	142 (5-5/8)

► Specification

Voltage (V)	Current (A)	Cycle (Hz)	Continuous Rating (W)		Max. Output (W)
			Input	Output	
110	2.3	50/60	240	65	150
120	2.0	50/60	---	65	150
220	1.1	50/60	240	65	150
230	1.1	50/60	240	65	150
240	1.1	50/60	240	65	150

Specifications / Model	**MT922**
Pad diameter: mm (")	123 (4-7/8)
Abrasive disc diameter: mm (")	125 (5)
Orbits per minute: min.-1= opm	12,000
Strokes per minute: min.-1= spm	24,000
Double insulation	Yes
Power supply cord: m (ft)	2.0 (6.6)
Weight according EPTA-Procedure 01/2003: kg (lbs)	1.1 (2.4)

► Standard equipment

Abrasive disc 125-120 (Hook & loop type) ..... 1 pc

Note: The standard equipment for the tool shown above may vary by country.

Repair

CAUTION: Remove the sanding disc from the machine for safety before repair/ maintenance in accordance with the instruction manual!

[1] NECESSARY REPAIRING TOOLS

Code No.	Description	Use for
1R269	Bearing extractor	Removing Ball bearing

[2] Disassembly/ Assembly

[2]-1. Switch, Power supply cord and Carbon brush

Disassembling

1) Switch and Power supply cord are accessible by just removing Top cover and 4x30 Pan head screws (3pcs.).
2) Remove Brush holders with Carbon brushes as follows:
   - Pull out flag terminals of lead wires from tabs of Brush holder.
   - Hold the tab with long nose pliers, then push one of Carbon brush toward Commutator side and lift up Brush holder vertically. (**Fig. 1**)
   - Remove the other Brush holder and Carbon brush in the same manner.

   Note: Do not bend tabs of Brush holders.
   Do not scratch commutator.

Fig. 1

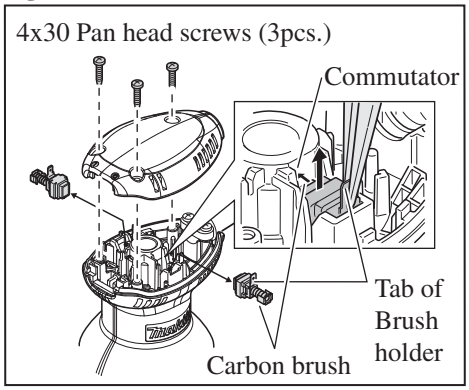

Assembling

Take the disassembling step in reverse.

[2]-2. Pad 123, Ball bearing 6202DDW and Armature Ass'y

1) Remove M4x18 Pan head screws (3pcs.) then separate Pad 123, Bearing box cover and Brake ring. (**Fig. 2**)
2) Hold Fan 88 by inserting slotted screwdriver from a vent of Skirt, then remove M4x14 Pan head screw with Flat washer 4 from shaft of Armature ass'y.
   Flat washer 15, Bearing box and Ball bearing 6202DDW can be removed. (**Fig. 3**)

Fig. 2

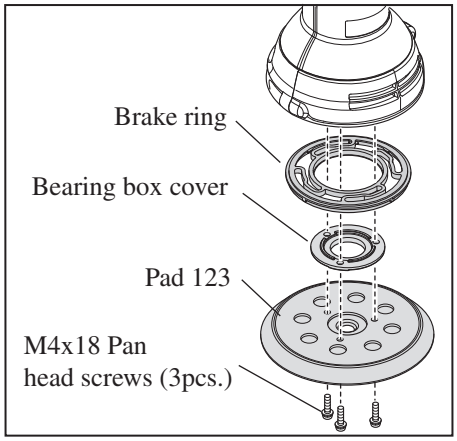

Fig. 3

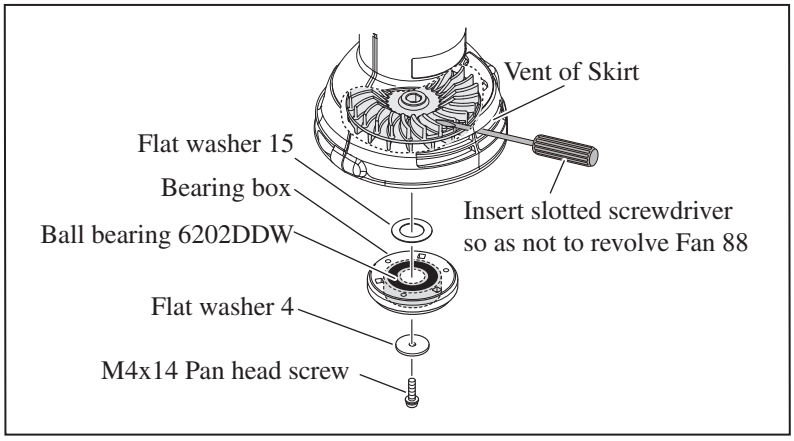

3) Separate Skirt set (L) and (R) by removing M4x20 Pan head screws (2pcs.), then pull out Fan 88. (**Fig. 4**)
4) Remove 4x18 Tapping screws (4pcs.) then pull out Armature ass'y with Bracket from Motor housing set. (**Fig. 5**)

Fig. 4

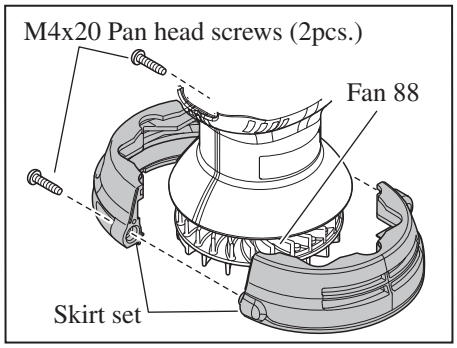

Fig. 5

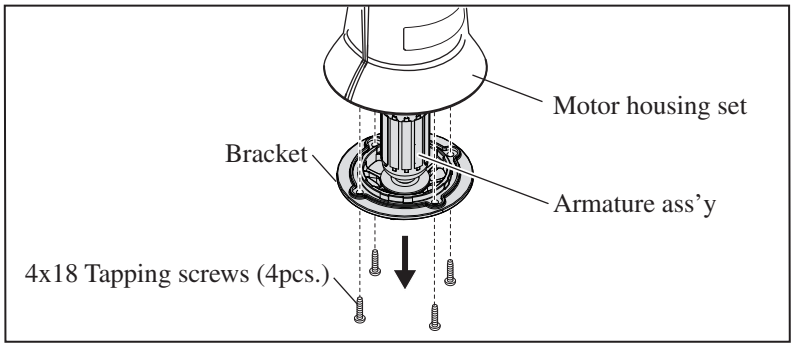

Repair

[2]-2. Pad 123, Ball bearing 6202DDW and Armature Ass'y (cont.)

Disassembling

5) Remove Bracket with arbor press as illustrated in **Fig. 6**.
6) Remove Ball bearings from Armature ass'y using 1R269 and Water pump pliers as illustrated in **Figs. 7 and 8**.
Note: There is little space between Ball bearing 606ZZ and Insulation washer / Ball bearing 629DDW and Washer 9. Therefore, hold the jaws of 1R269 with water pump pliers to retain Ball bearing securely.
Temporarily tighten M4x14 Pan head screw to Armature shaft to protect the female thread when removing Ball bearing 629DDW. (**Fig. 8**)

Fig. 6

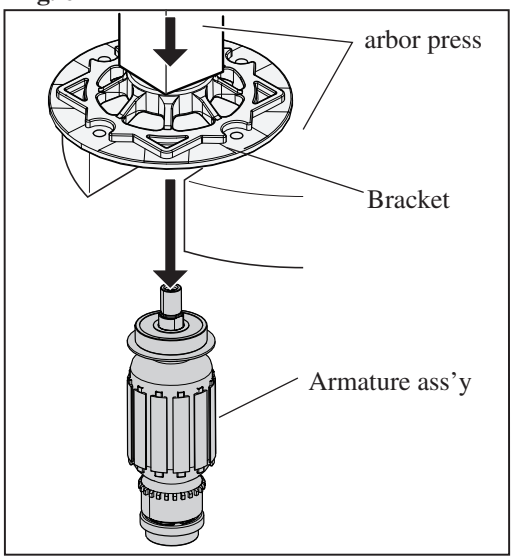

Fig. 7

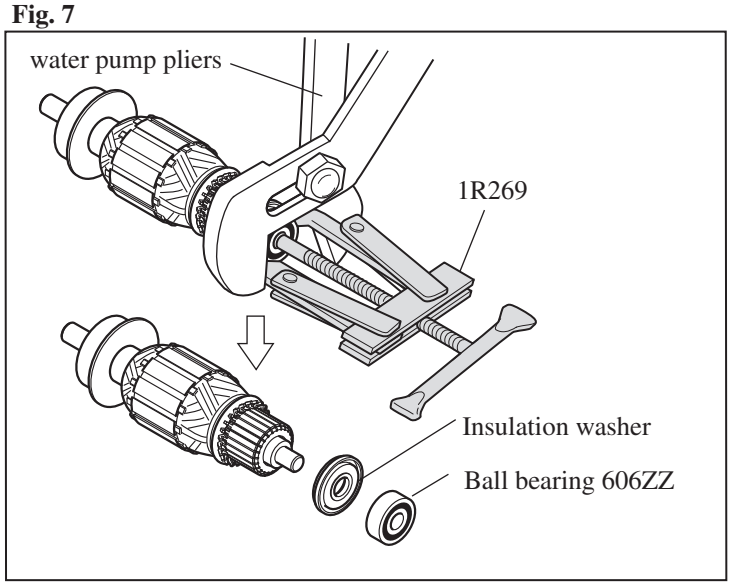

Fig. 8

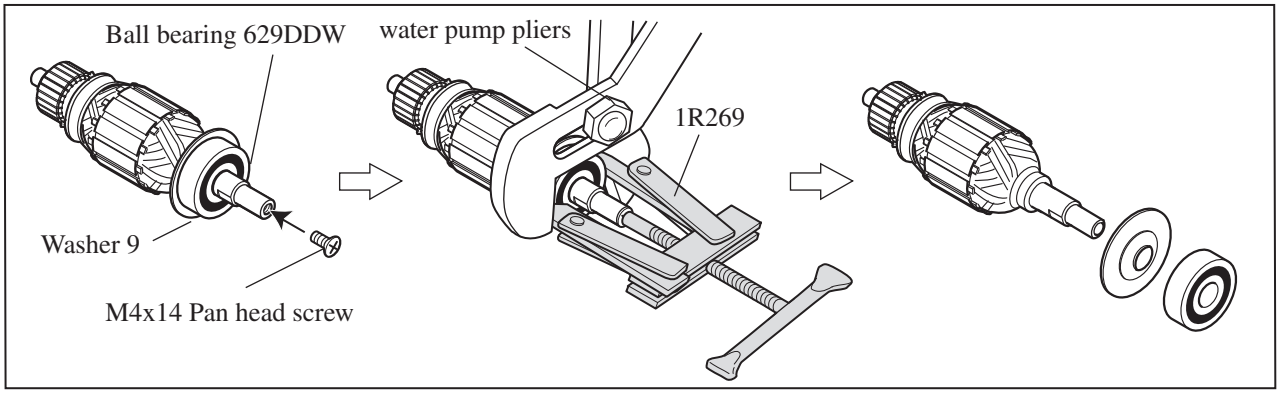

Assembling

Take the disassembling step in reverse.
Note: When fixing Washer 9 to Armature shaft, face the convex portion to outside as illustrated in **Fig. 9**.
Fit Brake ring into Skirt set as illustrated in **Fig. 10**.

Fig. 9

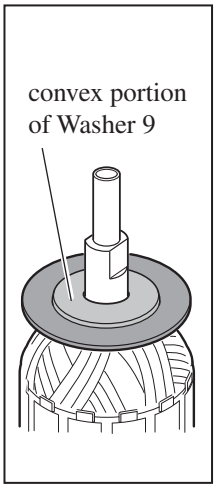

Fig. 10

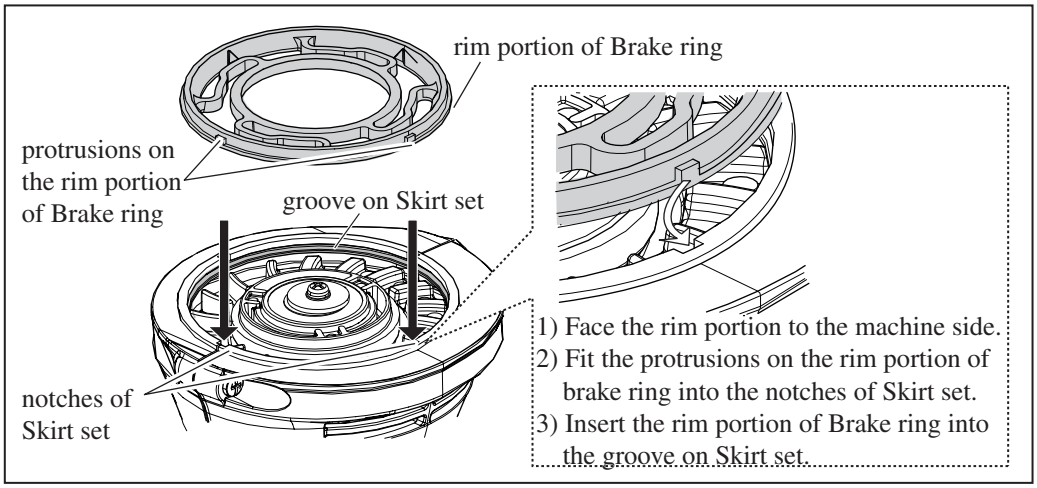

Circuit diagram

Fig. D-2

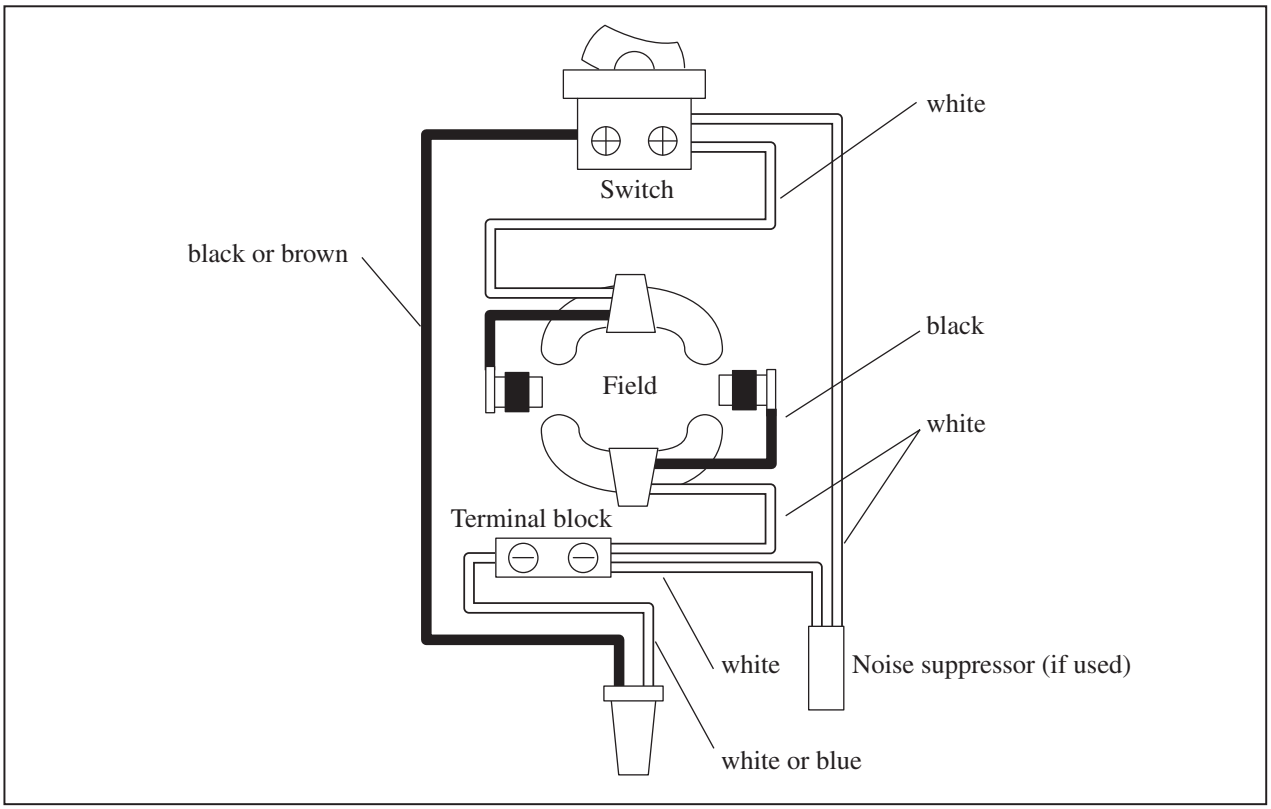

Wiring diagram

Fig. D-2