TECHNICAL INFORMATION

Model No. ► MT870

Description ► Rotary Hammer 22mm (7/8")

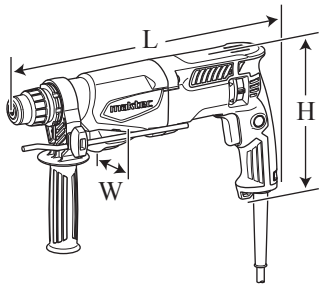

Dimensions: mm (")	
Length (L)	362 (14-1/4)
Width (W)	71 (2-13/16)
Height (H)	194 (7-5/8)

CONCEPT AND MAIN APPLICATIONS

Model MT870 is the first Rotary Hammer of **maktec** brand adapted for up to 22mm (7/8") SDS-PLUS bits.
Its main features are:

- 2 operation modes - Rotation only and Rotation with Hammering
- Variable speed control by switch trigger
- Rotation reverse system using brush holder unit.

► Specification

Voltage (V)	Current (A)	Cycle (Hz)	Continuous Rating (W)		Max. Output (W)
			Input	Output	
110	6.8	50/ 60	710	240	500
120	6.1	50/ 60	---	240	500
127	5.9	50/ 60	710	240	500
220	3.4	50/ 60	710	240	500
230	3.2	50/ 60	710	240	500
240	3.1	50/ 60	710	240	500

No load speed: min.$^{-1}$= rpm			0 - 1,100
Impacts per minute: min.$^{-1}$= ipm			0 - 4,350
Chuck type			Adapted for SDS-PLUS bits
Capacities: mm (")	Concrete	TCT bit	22 (7/8)
		Core bit	54 (2-1/8)
		Diamond core bit	65 (2-9/16)
	Steel		13 (1/2)
	Wood		32 (1-1/4)
Operation mode			2 modes (Rotation only/ Rotation with Hammering)
Variable speed control by trigger			Yes
Rotation reversing facility			Yes
Torque limiter			Yes
Protection against electric shock			Double insulation
Power supply cord: m (ft)			Europe, Panama, Mexico, Colombia: 4.0 (13.1), Australia, Brazil: 2.0 (6.6), Other countries: 5.0 (16.4)
Weight according to EPTA- Procedure 01/2003*: kg (lbs)			2.5 (5.6)

*with Side grip

► Standard equipment

Depth gauge 1
Side grip 1
Plastic carrying case 1

Note: The standard equipment for the tool shown above may vary by country.

► Repair

CAUTION: Repair the machine in accordance with “Instruction manual” or “Safety instructions”.

[1] NECESSARY REPAIRING TOOLS

Code No.	Description	Use for
1R003	Retaining ring S pliers ST-2N	Removing /mounting Ring spring 14, 15
1R026	Bearing setting pipe 16-8.2	Assembling Bearing box by pressing
1R032	Bearing setting plate 8.2	Assembling Helical gear 27, Bearing box
1R035	Bearing setting plate 15.2	Removing Helical gear 27
1R036	Bearing setting plate 17.2	Assembling of Helical gear 27
1R045	Gear extractor	Removing / mounting Steel ball 3
1R164	Ring spring setting tool A	Assembling Oil seal 25
1R165	Ring spring setting tool B	Assembling Cup sleeve
1R212	Tip for Retaining ring pliers	Attachment for 1R003
1R228	1/4” Hex shank bit for M4	Screwing / Unscrewing M4x16 Hex socket head bolt
1R232	Pipe 30	Assembling Oil seal 25
1R252	Round bar for Arbor 30-100	Removing Oil seal 25
1R258	V Block	Assembling Oil seal 25
1R269	Bearing extractor	Removing Ball bearing 6000ZZ, Ball bearing 627ZZ
1R281	Round bar for Arbor 7-50	Removing Helical gear 27
1R388	Ring spring remover	Removing Ring spring 28

[2] LUBRICATION

Apply spesific grease and lubricants to the following portions designated with triangles to protect parts and product from unusual abrasion.

Item No.	Description	Grease	Portion to lubricate	Amount
1	Cap 35	◀	Lip portion where Hammer bit contacts	a little
7	Washer 16	◀	Inner surface on which (28) Tool holder complete contacts	
16	Gear housing	◁	Oil seal 25 where Tool holder complete contacts	
26	Steel ball 7	◀	Whole portion	
28	Tool holder complete	◀	Outer surface which contacts Plane bearing built in (69) Inner housing complete.	
36	X ring 9	◀	Whole portion	
38	Impact bolt A	◀	Drum portion where Sleeve 9A and Ring 10A contact	
42	O ring 9	◀	Whole portion	

Fig. 1

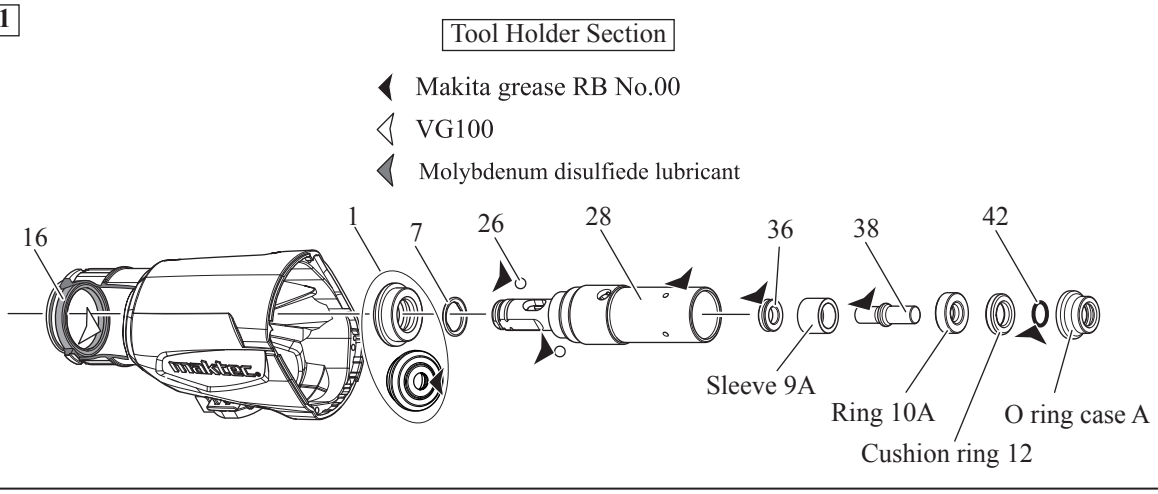

Repair

[2] LUBRICATION

Apply spesific grease and lubricants to the following portions designated with triangles to protect parts and product from unusual abrasion.

Item No.	Description	Grease	Portion to lubricate	Amount
33	Spur gear 51	◀	Teeth portion for smooth engaging with (56) Spur gear 10	3 g
45	O ring 17.5	◀	Whole portion	a little
46	Piston cylinder	◀	46a: Inside where Striker moves	2 g
			46b: Accepting hole for Piston joint	a little
		◀	46c: Drum portion which contacts with Tool holder complete	a little
48	Piston joint	◀	Drum portion where Guide plate contacts	a little
56	Spur gear 10	◀	Whole portion	a little
57	Clutch cam	◀	Groove portion where Change lever's Push corn contacts	a little
58	Swash bearing 10	◀	Whole portion	3 g
64	Helical gear 27	◀	Teech portion for smooth engaging with Armature's gear	a little
69	Inner housing complete	◀	Around Spur gear 10, Swash bearing and Clutch cam B	18 g
71	Oil seal 12	◁	Lip portion	a little

Fig. 1A

Gear and Swash Bearing Section

◀ Makita grease RB No.00

◁ VG100

◀ Molybdenum disulfiede lubricant

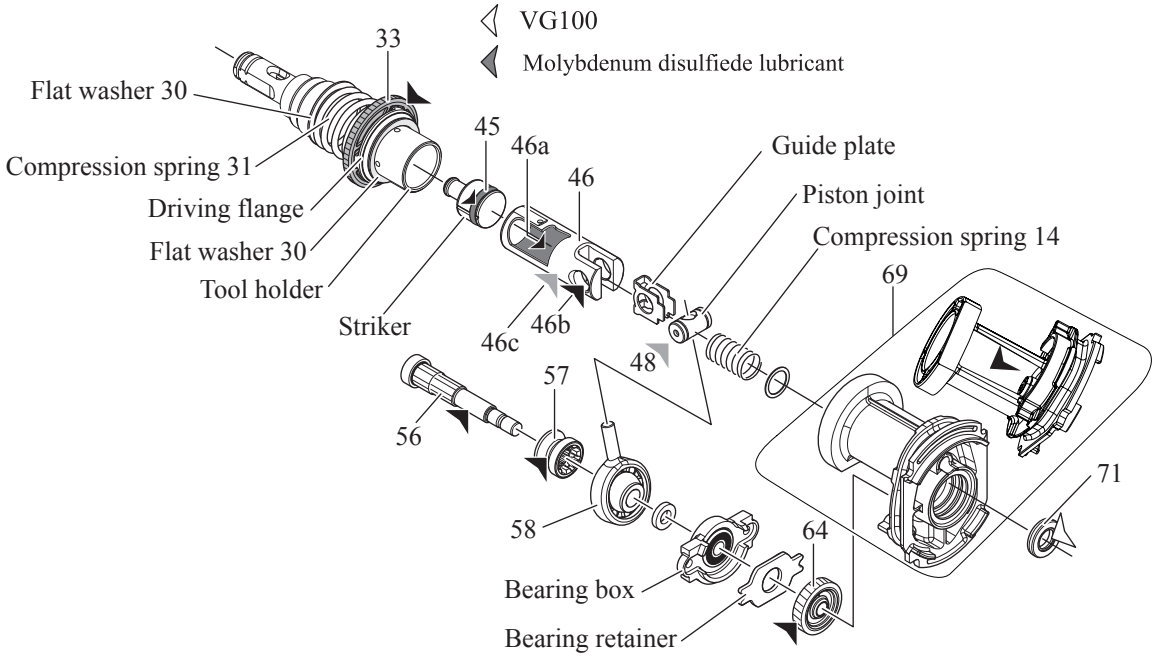

Item No.	Description	Grease	Portion to lubricate	Amount
23	O ring 17.5	◁	Whole portion	a little
24	Push cone	◀	Inside where Compression spring 5 is set	a little

Fig. 1B

Mode Change Section

◀ Makita grease RB No.00

◁ VG100

◀ Molybdenum disulfiede lubricant

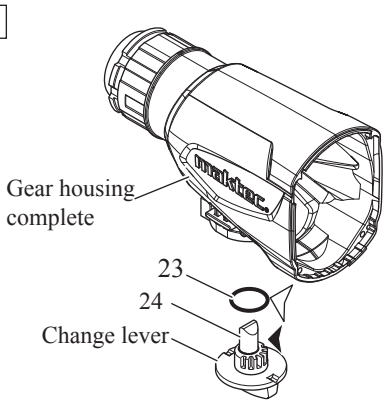

Repair

[3] DISASSEMBLY/ASSEMBLY

[3]-1. Tool Holder Section

DISASSEMBLING

Disassemble Tool holder section. (**Fig. 2**)

Fig. 2

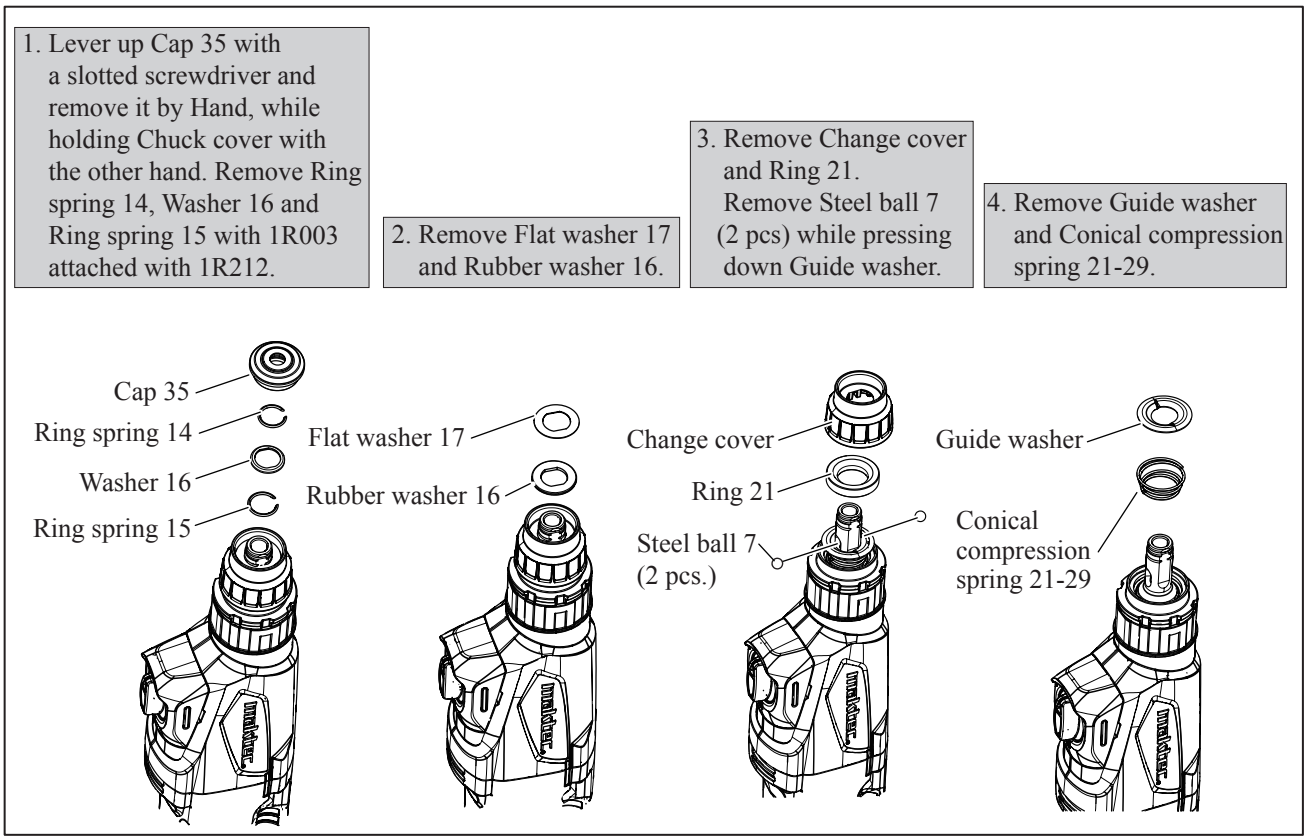

ASSEMBLING

Tool holder section is assembled by taking the reverse step of Disassembling (**Fig. 2**).
Note: Pay attention to the direction of parts in assembling (**Fig. 3**)

Fig. 3

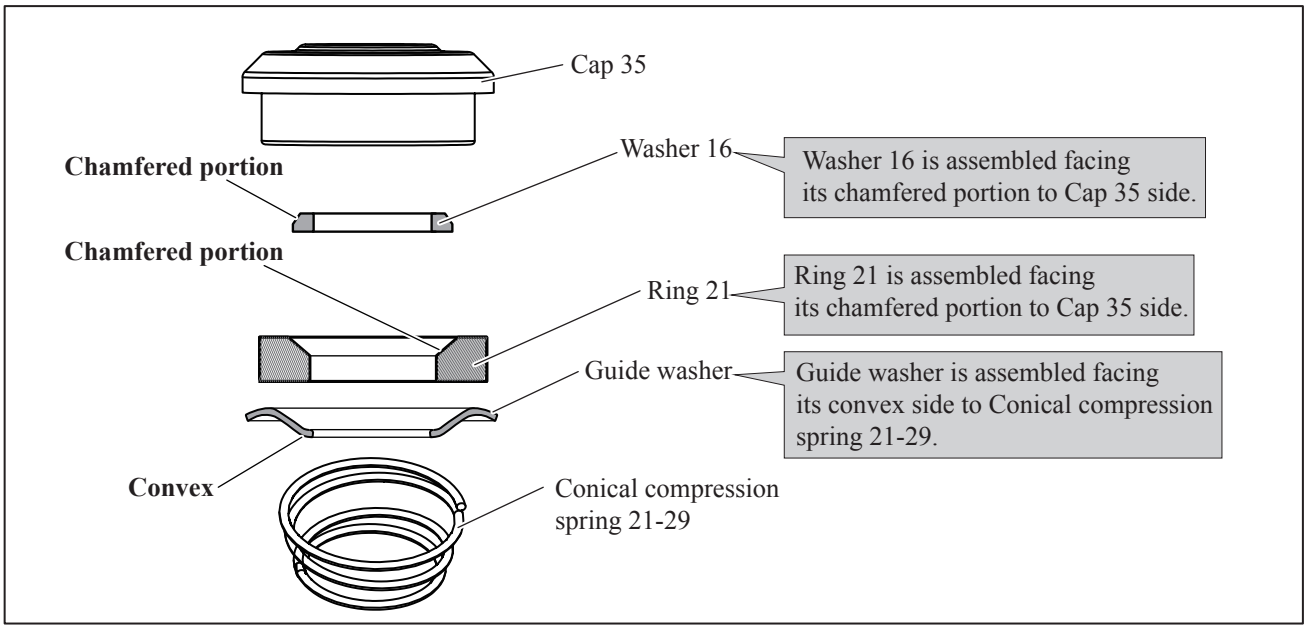

Repair

[3] DISASSEMBLY/ASSEMBLY

[3]-2. Change Lever

DISASSEMBLING

Disassemble Change lever cover and Change lever at Hammer drill mode. (**Fig. 4**)

Fig. 4

1. Lever up Change lever cover with a Slotted screwdriver by inserting it into a slot on Gear housing and do the same for another side of Change lever cover.
   Now the Change lever cover is removed.

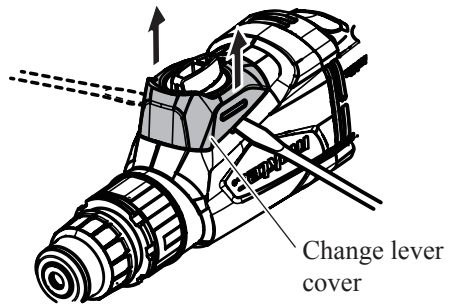

2. Remove Change lever and its component parts.

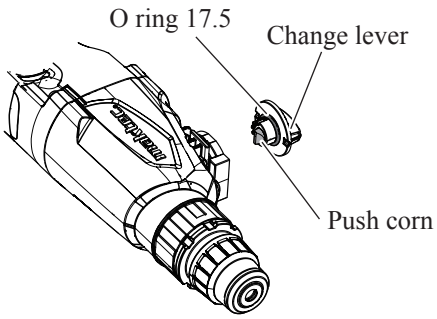

ASSEMBLING

Assemble Change lever at Hammer drill mode. (**Fig. 5**)

Fig. 5

1. Assemble Change lever while;
   • facing triangle Index on Change lever to Switch trigger side,
   • fitting Push corn to Clutch cam's V groove,
   • fitting V notch on Change lever to Leaf spring's protrusion.
   Now the Change lever is assembled to Gear housing in Hammer drill mode.

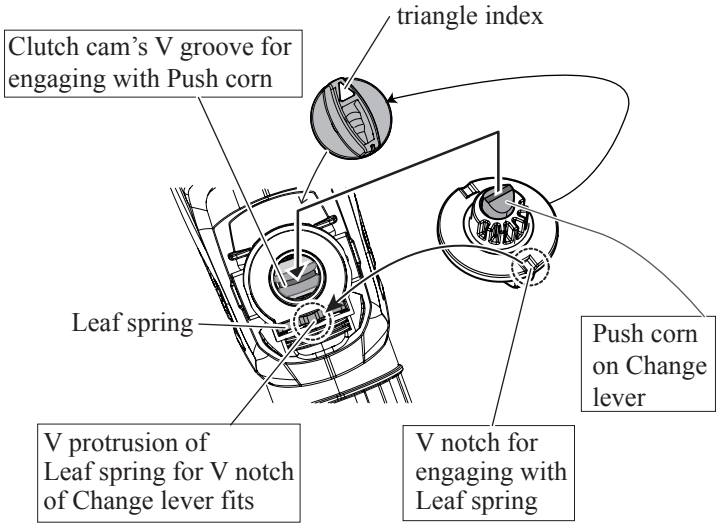

2. Mount Change lever cover in described direction below.

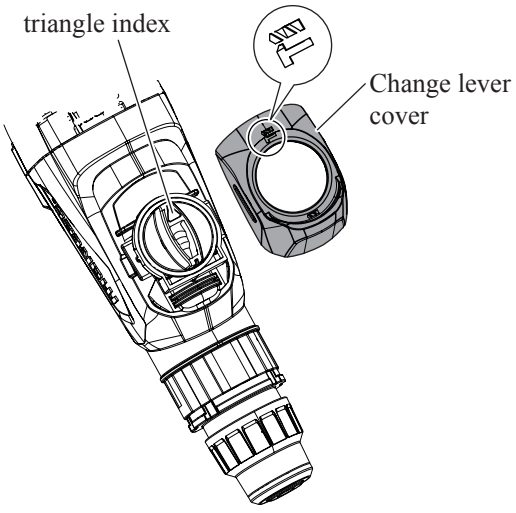

Repair

[3] DISASSEMBLY/ASSEMBLY

[3]-3. Armature

DISASSEMBLING

(1) Remove Handle cover and Carbon brushes to prevent Armature's commutator from scratching. (**Fig. 6**)

Fig. 6

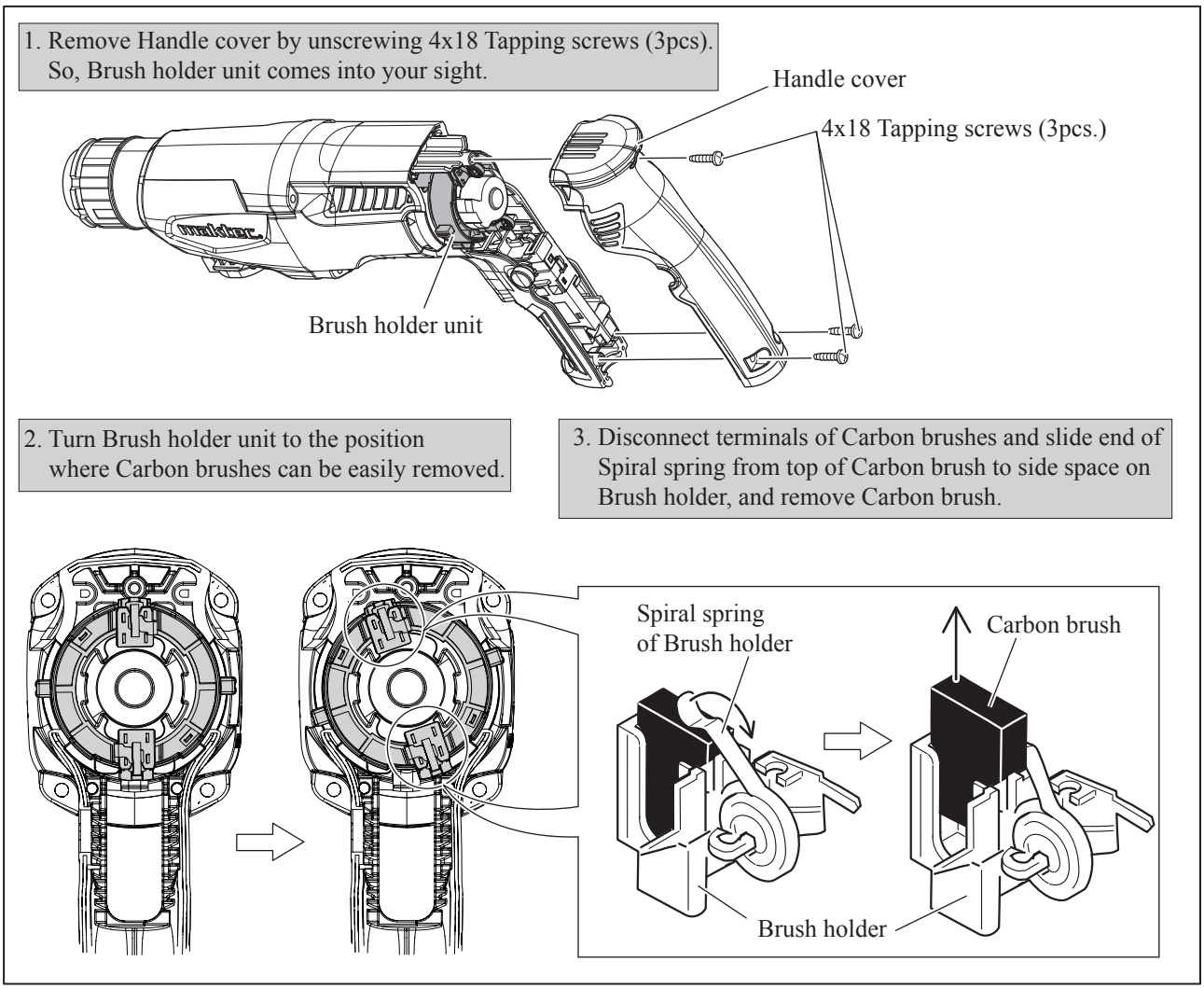

(2) Separate Gear housing from Motor housing by unscrewing 4x30 Tapping screws(4pcs). So, Armature is removed together with Gear housing. (**Fig. 7**)

Fig. 7

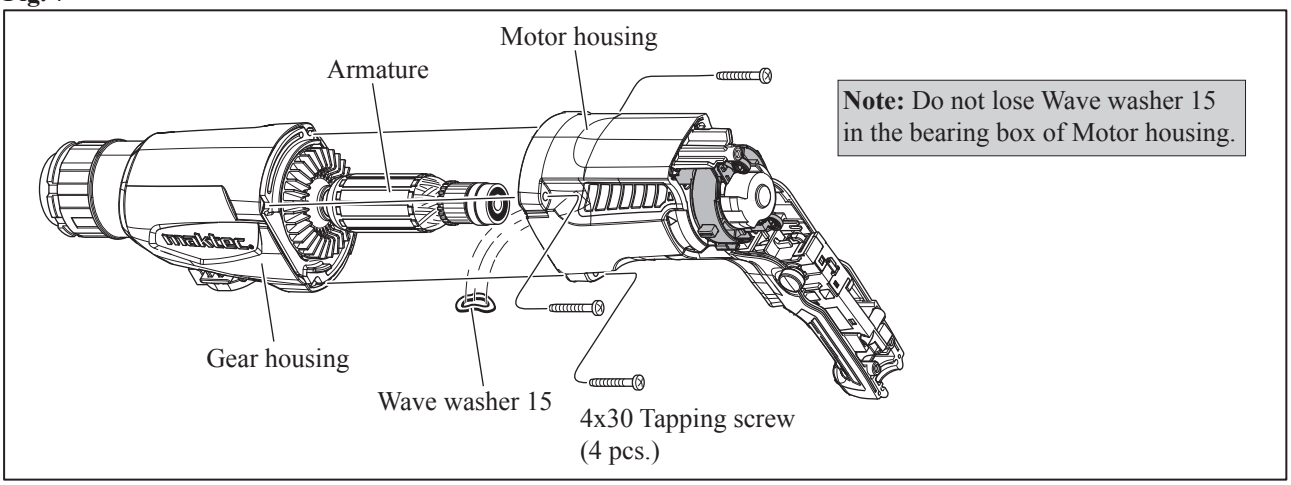

Repair

[3] DISASSEMBLY/ASSEMBLY

[3]-3. Armature

DISASSEMBLING

(3) Pull out Armature from Gear housing and remove Ball bearings and Washers. (**Fig. 8**)

Fig. 8

1. Directly pull out Armature from Gear housing by hand instead of knocking Gear housing with plastic hammer, because it is difficult to remove by knocking due to tight holding of Ball bearing by O Ring 26 in the Gear housing.

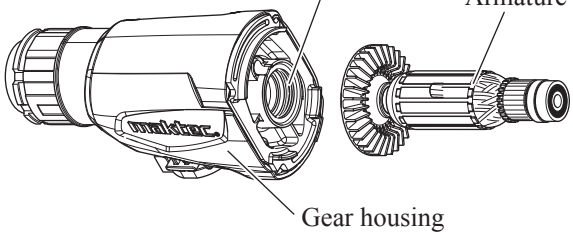

2. Remove Ball bearing 6000ZZ and Sleeve 8 at a time with 1R269, then remove Flat washer 10.

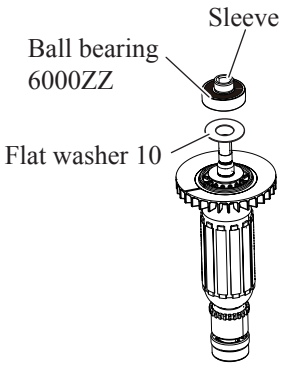

3. Remove Ball bearing 627ZZ and Insulation washer with 1R269.

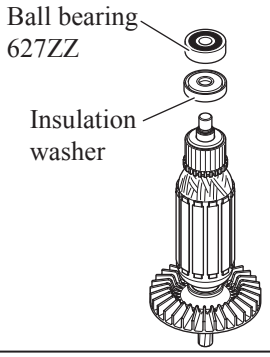

ASSEMBLING

Assemble Armature to Gear housing and Motor housing by taking reverse step of Disassembling. (**Figs. 8,** 7, **6**)
Note: Be sure to insert Wave washer 15 into the bearing box of Motor housing. (**Fig. 7**)

[3] -4. Torque Limiter Section

DISASSEMBLING

(1) Disassemble Tool holder section. (**Fig. 2**)
(2) Remove Change lever. (**Fig. 4**)
(3) Separate Gear housing from Motor housing and remove Armature from Gear housing. (**Figs. 7**, **8**)
(4) Separate Inner housing section together with Torque limiter section from Gear housing complete. (**Fig. 9**)

Fig. 9

1. Strike Tool holder with Plastic hammer while holding Gear housing by hand.

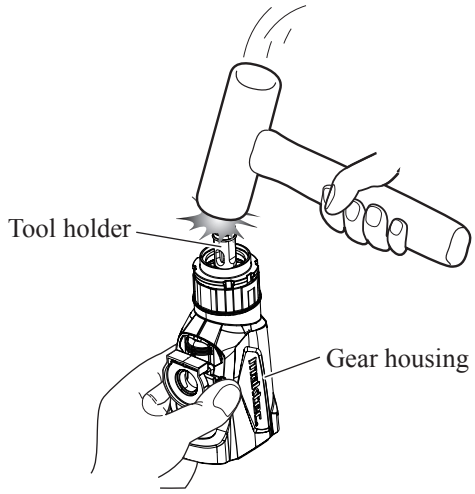

2. So, Torque limiter section comes out together with Inner housing complete and Swash bearing section.

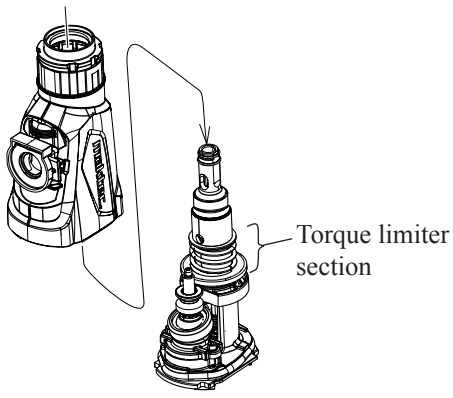

Repair

[3] DISASSEMBLY/ASSEMBLY

[3]-4. Torque Limiter Section

DISASSEMBLING

(5) Disassemble Torque limiter section. (**Fig. 10**)

Fig. 10

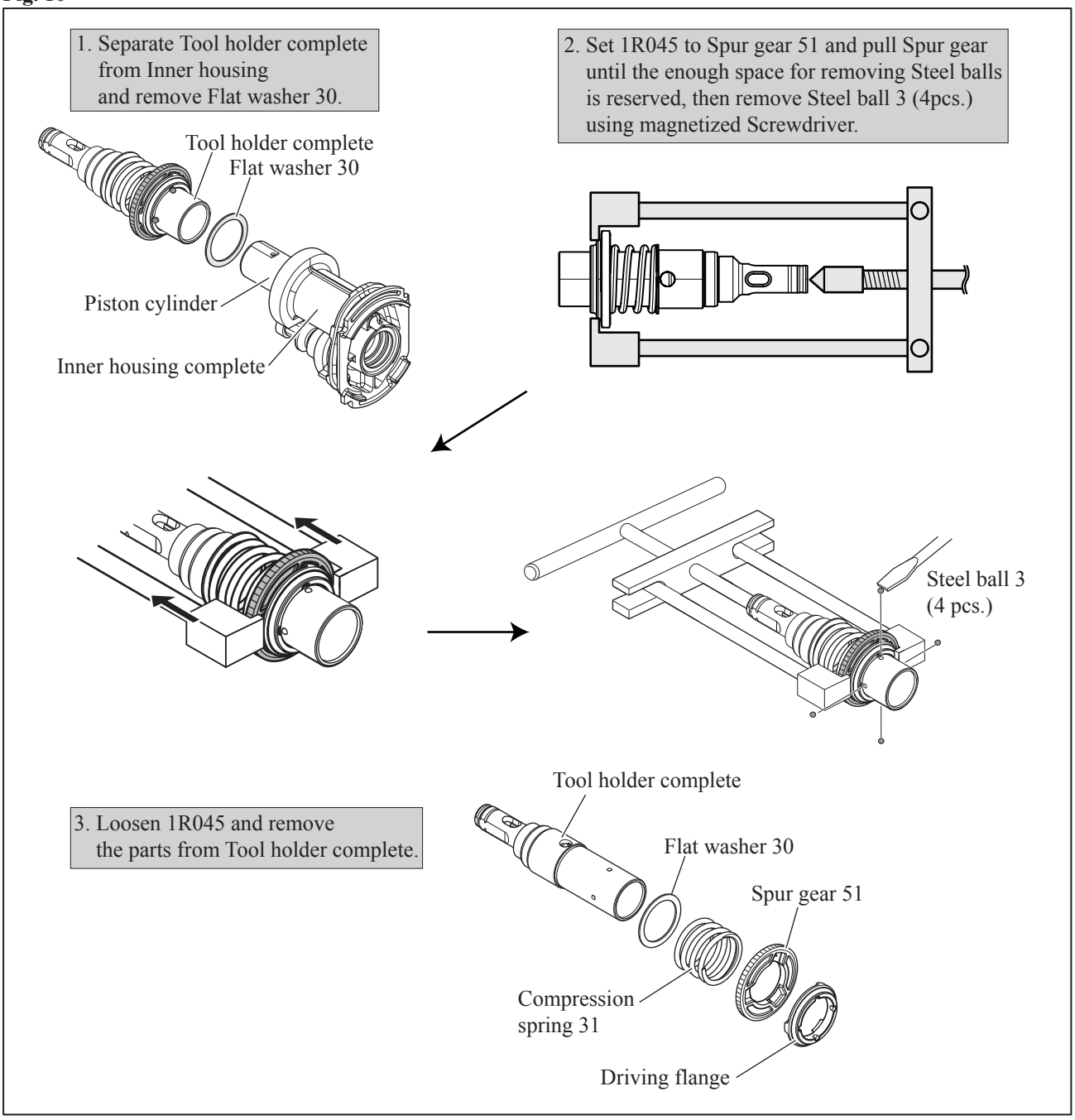

ASSEMBLING

Take the reverse steps of Disassembling. (**Fig. 10**)

► Repair

[3] DISASSEMBLY/ASSEMBLY

[3]-5. Impact Bolt

DISASSEMBLING

(1) Disassemble Tool holder section. (**Fig. 2**)
(2) Remove Change lever. (**Fig. 4**)
(3) Separate Gear housing from Motor housing, and remove Armature from Gear housing. (**Figs. 6**, **7**, **8**)
(4) Separate Inner housing sections from Gear housing complete together with Torque limiter section (**Fig. 9**)
(5) Separate Tool holder complete from Inner housing and remove Flat washer 30. (**Fig. 10**)
(6) Disassemble Impact bolt from Tool holder by following steps in **Fig. 11.**

Fig. 11

1. Push the gap inside of Tool holder with a slotted screwdriver, if the gap of Ring spring 28 is positioned on the opening of Tool holder.

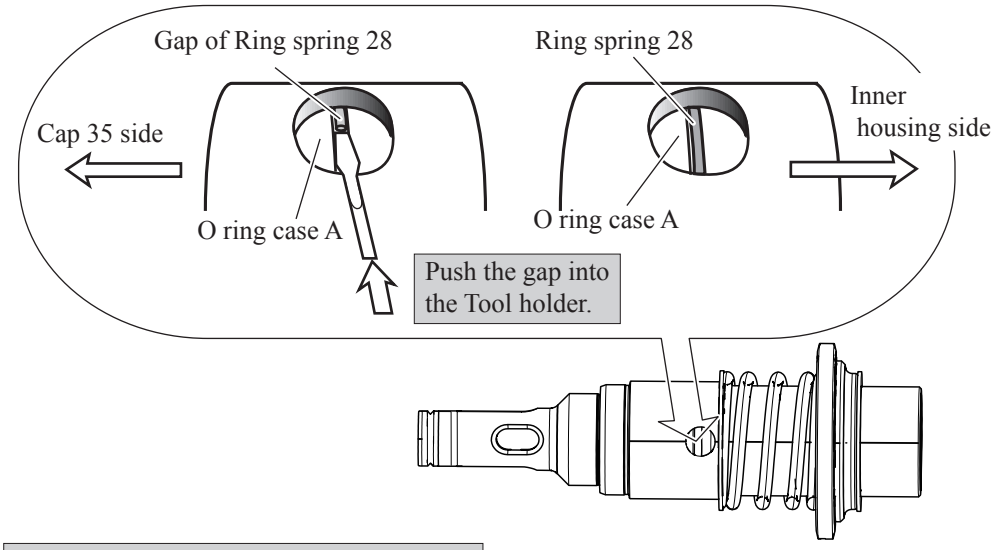

2. Insert 1R388 into Tool holder complete and fasten the Tool holder complete with vise at horizontal position of the two openings of Tool holder.

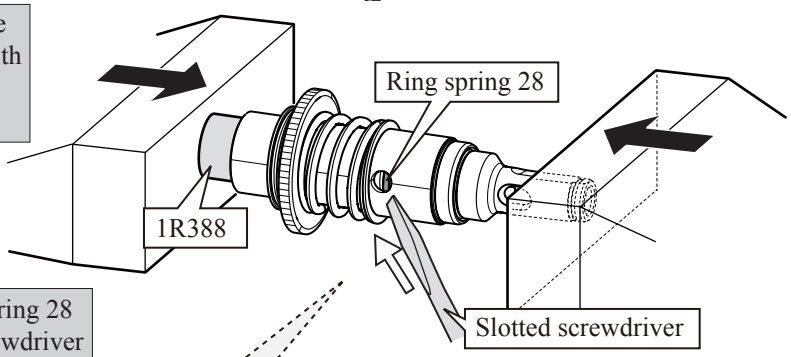

3. Apply a slotted screwdriver to Ring spring 28 through the opening and strike the screwdriver until the Ring spring 28 comes out of groove toward Spur gear 51 side.
4. Do the same for the opposite side.

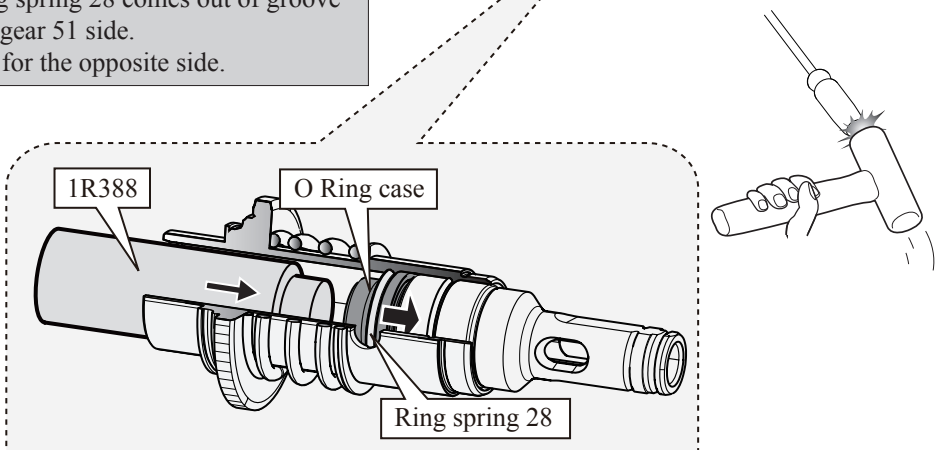

Note: Ring spring 28 is free from tension when O Ring case is pushed up by 1R388.

5. Now the Ring sprig 28 is out of groove completely.

► Repair

[3] DISASSEMBLY/ASSEMBLY

[3]-5. Impact Bolt

DISASSEMBLING

(7) Remove O Ring case and Impact bolt from Tool holder complete. (**Fig. 12**)

Fig. 12

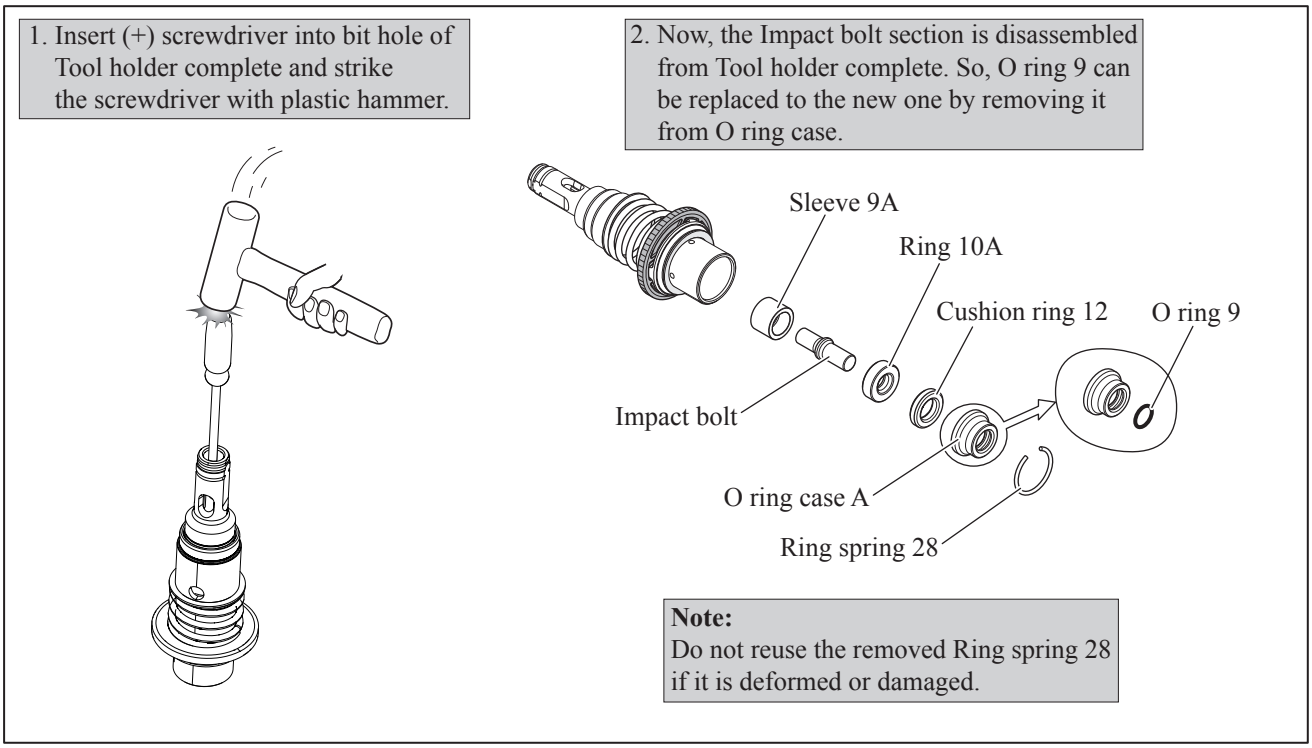

ASSEMBLING

(1) Insert Impact bolt section into Tool holder complete by following the order of illustlation below. (**Fig. 13**)

Fig. 13

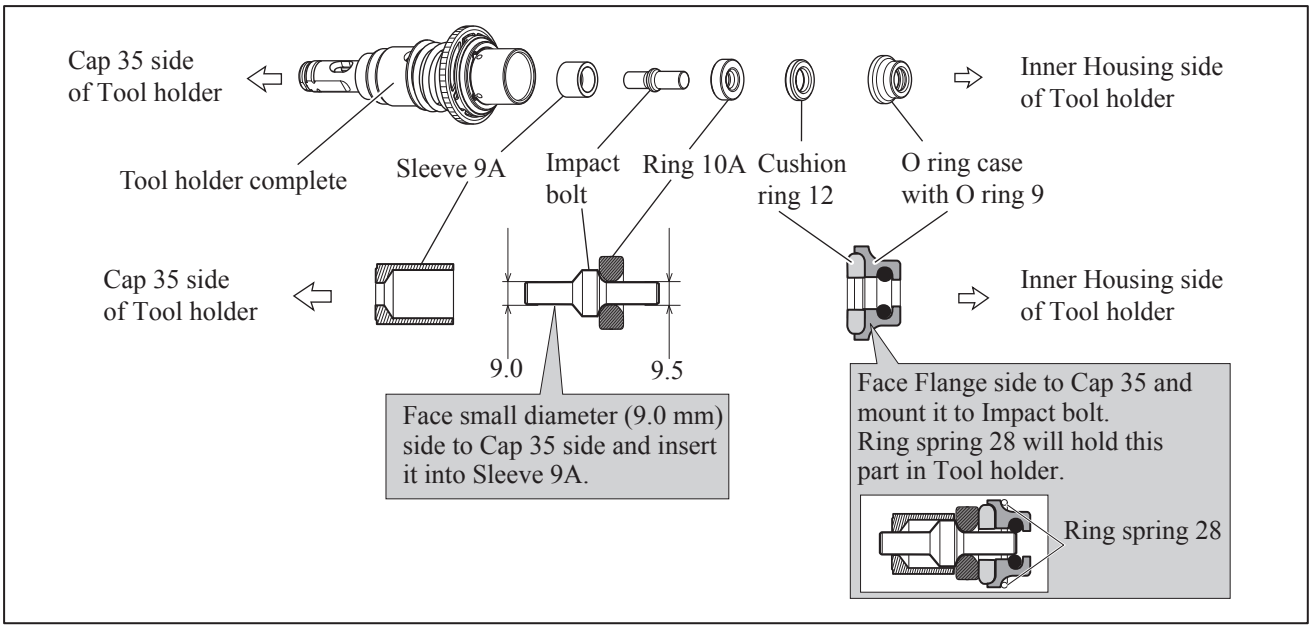

Repair

[3] DISASSEMBLY/ASSEMBLY

[3]-5. Impact Bolt

ASSEMBLING

(2) Fix the Impact bolt section by fitting Ring spring 28 in the groove of Tool holder. (**Fig. 14**)

Fig. 14

1. Insert Ring spring 28 into Tool holder complete while locating the gap of Ring spring 28 out of the two openings of Tool holder.
2. Apply Piston cylinder to Ring spring 28.

Note:
- Do not reuse the removed Ring spring 28 if it is damaged or deformed.
- Prepare Piston cylinder separately for fitting Ring spring 28 as it might be damaged in this procedure.

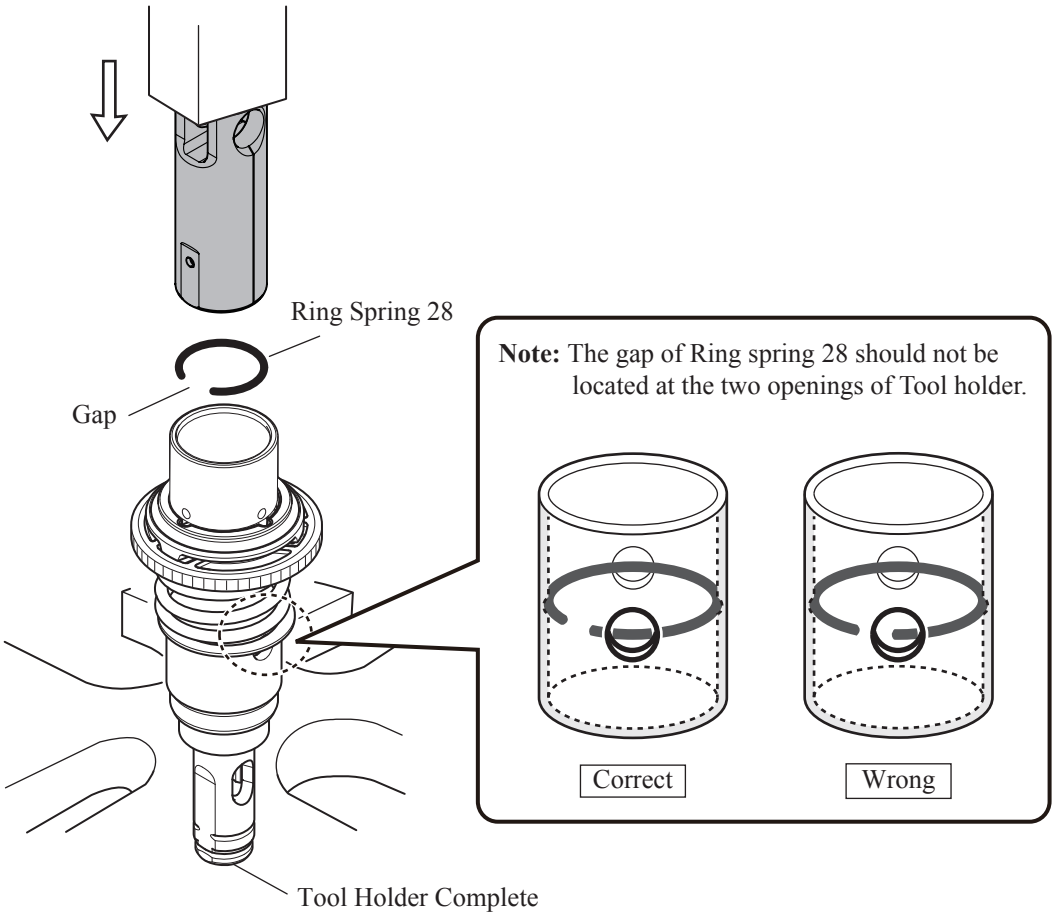

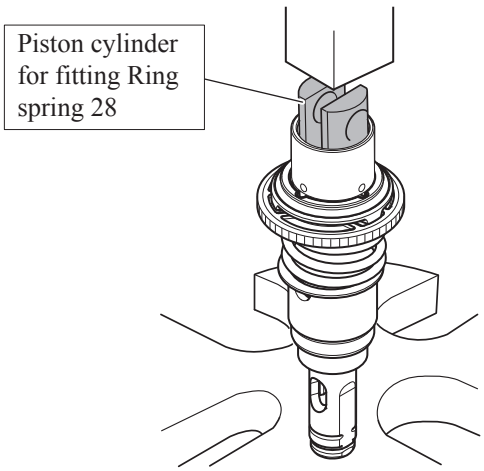

3. Press down Piston cylinder until the inserted Ring spring 28 fits into the groove in the Tool holder complete with Arbor press.

► Repair

[3] DISASSEMBLY/ASSEMBLY

[3]-6. Swash Bearing 10

DISASSEMBLING

(1) Disassemble Tool holder section. (**Fig. 2**)
(2) Remove Change lever. (**Fig. 4**)
(3) Separate Gear housing from Motor housing and remove Armature from Gear housing. (**Figs. 6**, **7**, **8**)
(4) Separate Inner housing section from Gear housing complete together with Torque limiter section. (**Fig. 9**)
(5) Separate Tool holder complete from Inner housing. And remove Flat washer 30. (**Fig. 10**)
(6) Swash bearing section can be removed from Inner housing section. (**Fig. 15**)

Fig. 15

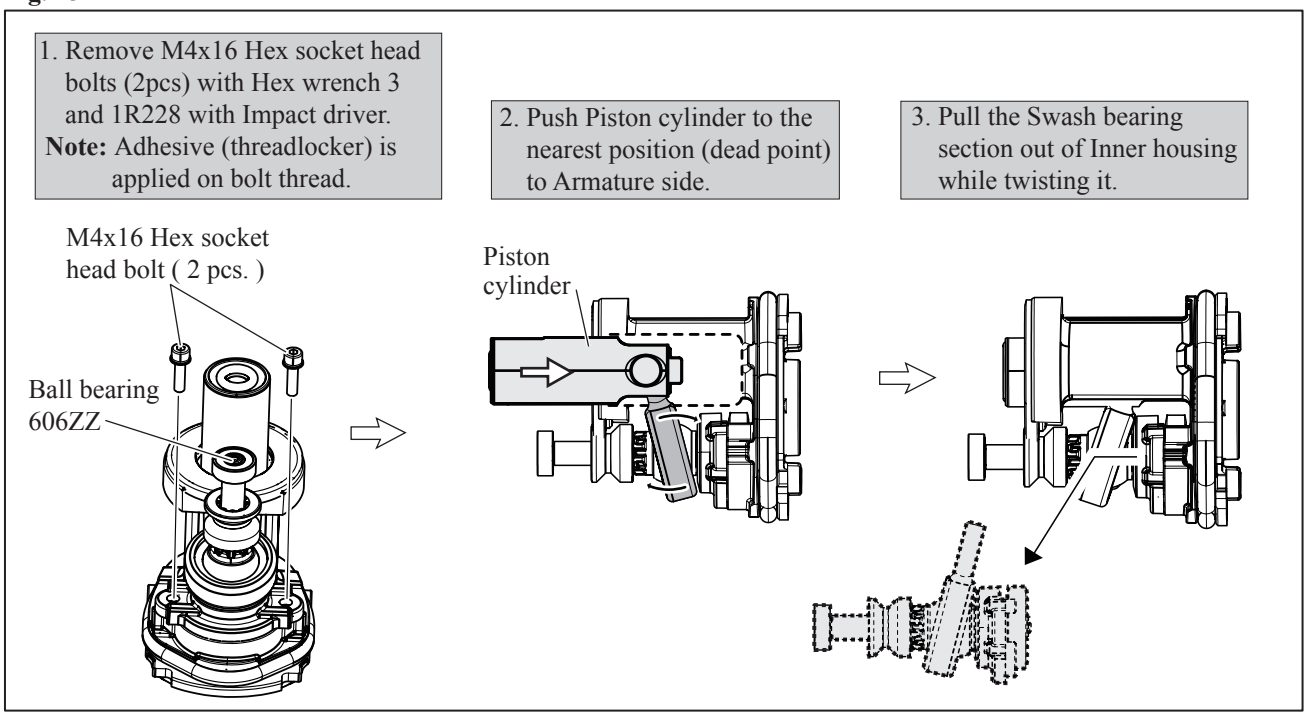

(7) Disassemble Swash bearing section by removing Spur gear 10. (**Fig. 16**)

Fig. 16

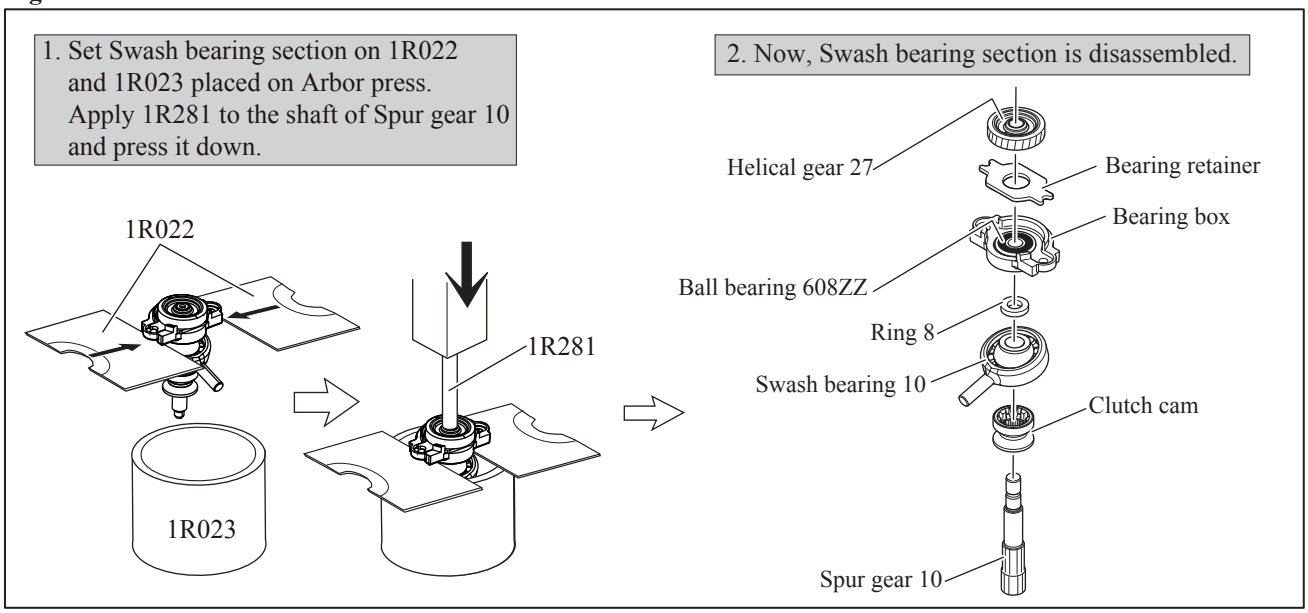

Repair

[3] DISASSEMBLY/ASSEMBLY

[3]-6. Swash Bearing 10

DISASSEMBLING

(8) Remove Ball bearing 606ZZ in case it remains in Gear housing in the step of **Fig. 9**.

Fig. 17

Insert again the shaft of Spur gear 10 of Swash bearing section into Ball bearing 606ZZ and hold gear housing while tilting Swash bearing section by a finger in the direction of an arrow. Then, hit the edge of Gear housing complete with plastic hammer. So, Ball bearing 606ZZ can be removed together with swash bearing section.

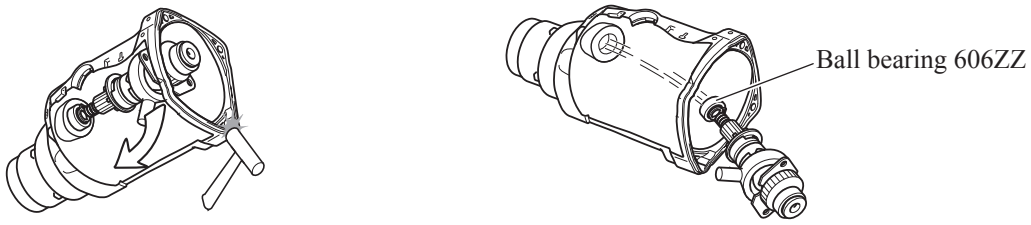

ASSEMBLING

(1) Assemble Swash bearing section as illustrated in **Fig. 18**.

Fig. 18

1. Install Ball bearing 608ZZ to Bearing box with arbor press.

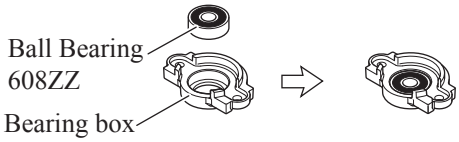

2. Insert Spur gear 10 into Clutch cam, Swash bearing 10 and Ring 8 and Bearing box.

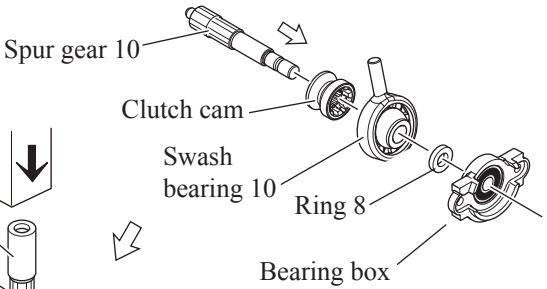

3. Set the Swash bearing section to 1R032 and set 1R026 on Spur gear 10, then press it with Arbor press.

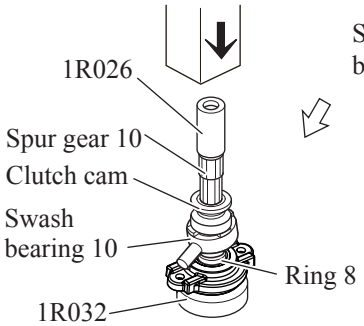

4. Overturn Spur gear 10 section on 1R032 and mount Bearing retainer and Spur gear 27, facing its tall boss to Bearing retainer.

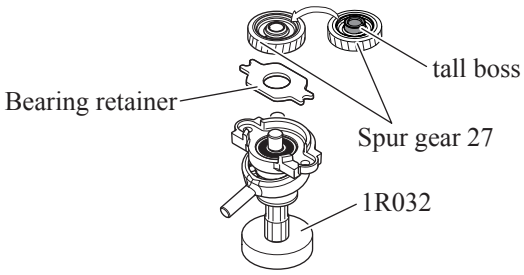

5. Put 1R036 onto the Spur gear 27 and press it with Arbor press.

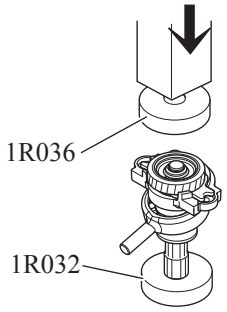

Repair

[3] DISASSEMBLY/ASSEMBLY

[3]-7. Joining Swash Bearing section to Piston Cylinder

ASSEMBLING

(2) Assemble Piston cylinder and Swash bearing section to Inner housing section by connecting them, then fasten the Bearing retainer with M4x16 Hex socket head bolts (2pcs). (**Fig. 19**)

Fig. 19

1. Insert Guide plate to Piston cylinder.

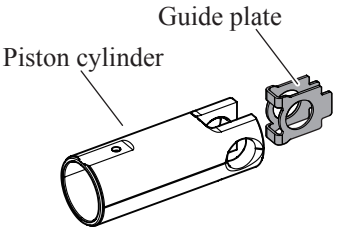

2. Insert Piston joint through Piston cylinder and Guide plate.

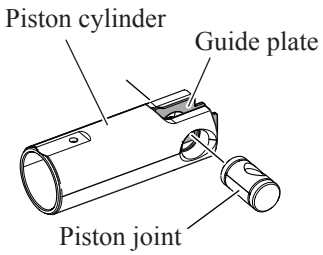

3. Insert Piston cylinder into Inner housing complete by fitting the Guide plate to Compression spring 14.

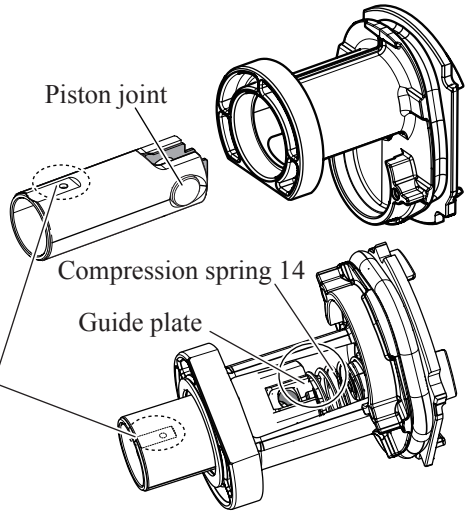

Note: Air release hole on Piston cylinder can be positioned at either side. (no fixed position)

4. Turn the pole of Swash bearing to the dead point to Armature side and insert it into the Piston joint's hole, then fix Bearing box to Inner housing.

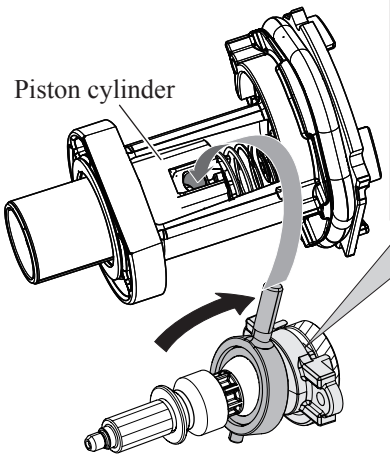

Note: Be careful with Bearing box position when joining Swash bearing section to Piston cylinder; Bracket open side is at Piston cylinder side and round side is at against Piston cylinder.

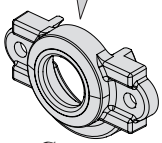

Correct

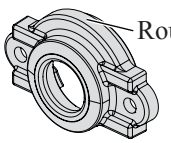

Wrong

5. Fit Swash bearing section to Inner housing complete by tightening M4x16 Hex socket head bolts (2 pcs.) through Bearing box.

Note: Apply adhesive (ThreeBond 1342 or Loctite 242) on the threads of M4x16 Socket head bolt when tightening.

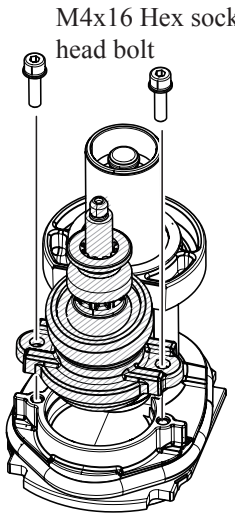

Repair

[3] DISASSEMBLY/ASSEMBLY

[3]-8. Assembling Inner housing to Gear housing

ASSEMBLING

Put Ball bearing 606ZZ in the Gear housing (**Fig. 17**),
and assemble Inner housing section to Gear housing. (**Fig. 22**)

Fig. 22

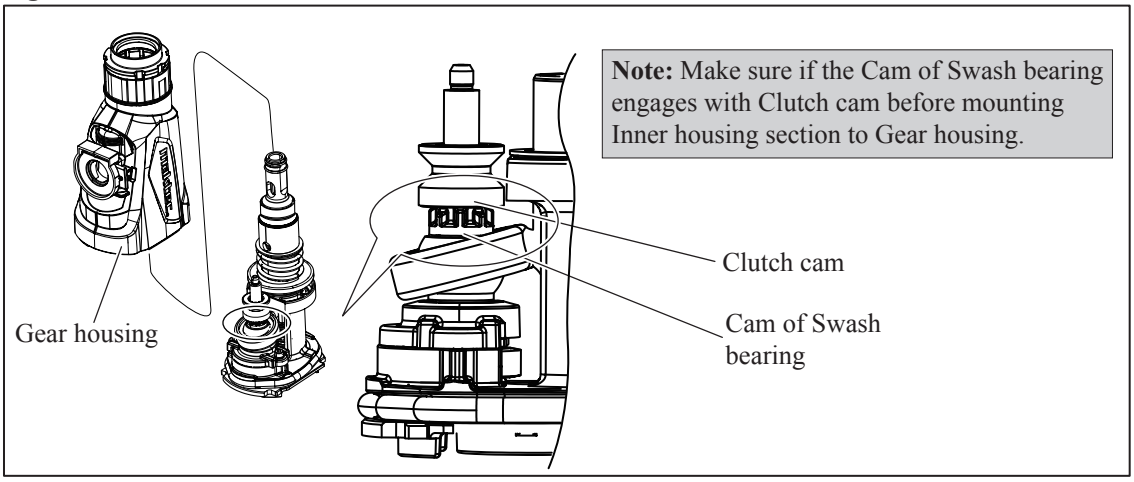

[3] -9 Gear Housing

DISASSEMBLING

Disassemble Oil seal 25, Flat washer 33, Ball bearing 6806DDW and Cup sleeve from Gear housing. (**Fig. 23**)

Fig. 23

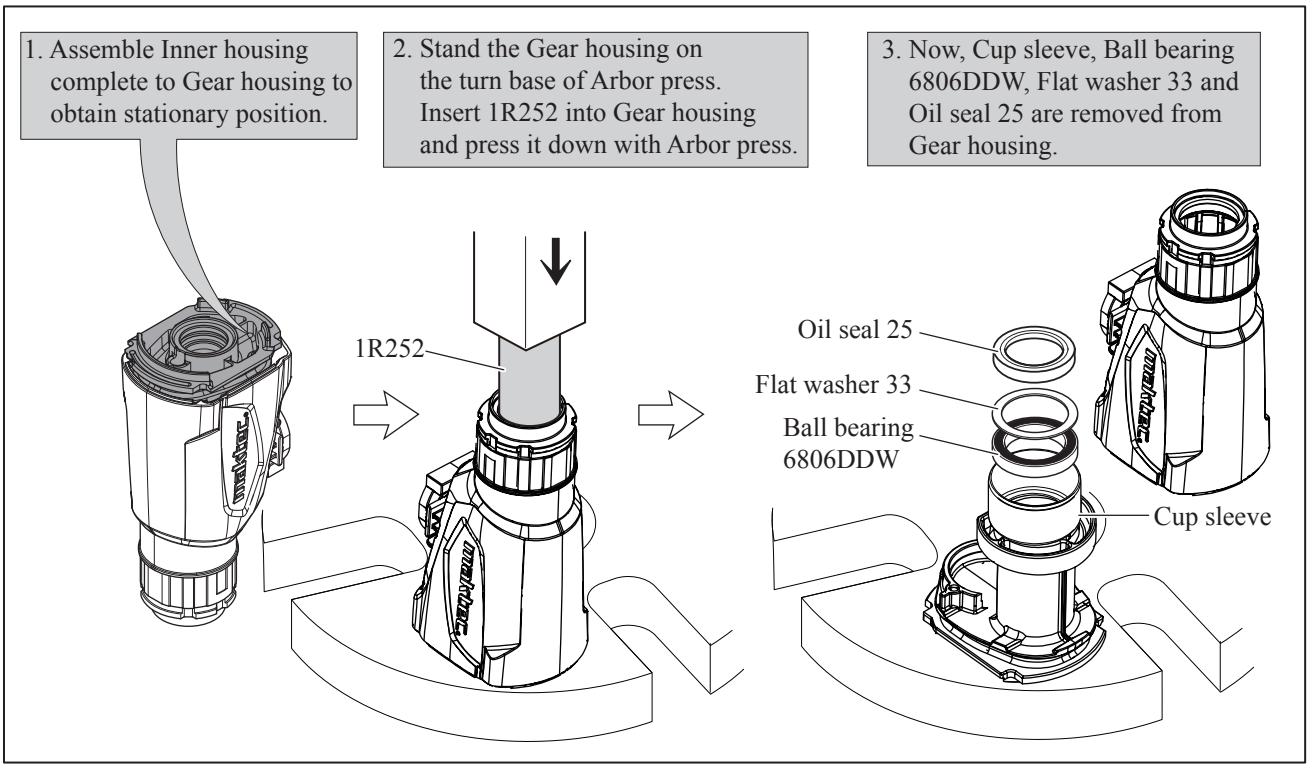

► Repair

[3] DISASSEMBLY/ASSEMBLY

[3]-9. Gear Housing

ASSEMBLING

Assemble Oil seal 25, Flat washer 33, Ball bearing 6806DDW and Cup sleeve to Gear housing. (**Fig. 24**)

Fig. 24

1. Stand Gear housing in between center notches of V blocks 1R258 by setting the stepped collar of Gear housing on them.

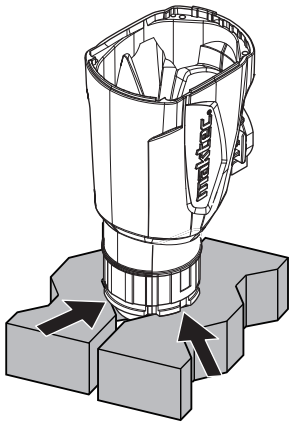

2. Apply 1R232 to Oil seal 25 and push it carefully with Arbor press till it stops.

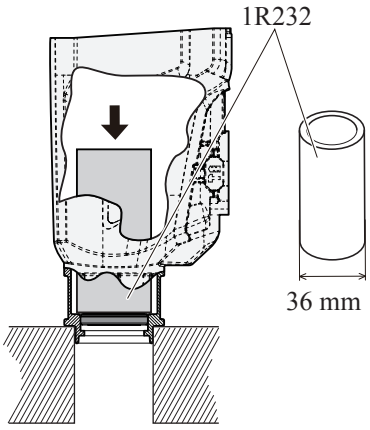

3. Then, apply 34 mm side of 1R164 to the Oil seal 25 and press it down with Arbor press till it stops.

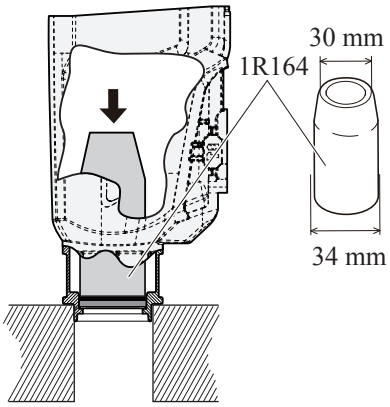

4. Assemble Flat washer 33 and Ball bearing 6806DDW by pressing them with Arbor press. Apply 1R165 onto Cup sleeve and press it with Arbor press.

Note: Face flat top side up.
Correct position

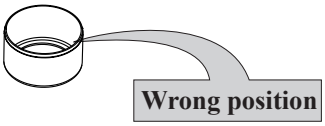

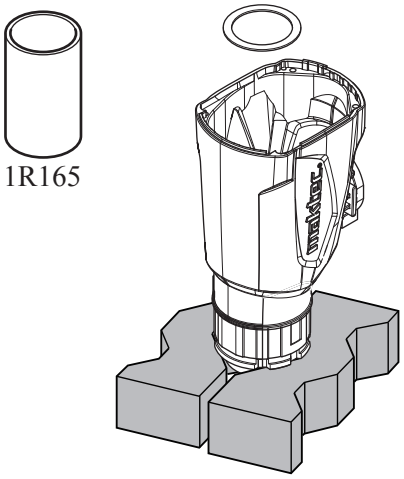

Repair

[4] MAINTENANCE PROGRAM

1. It is recommended to replace the listed parts below when replacing carbon brush as a maintenance for longer service life of the machine.
2. Wash or wipe off the old grease from Crank housing complete and Gear cover, and then apply the new grease.

Item No.	Descriptions
1	Cap 35
6	Ring spring 14
105	Ring spring 15
107	Rubber washer 16
26	Steel ball 7 (2pcs)
36	X ring 9
39	Cushion ring 12
42	O ring 9
43	Ring spring 28
45	O Ring 17.5

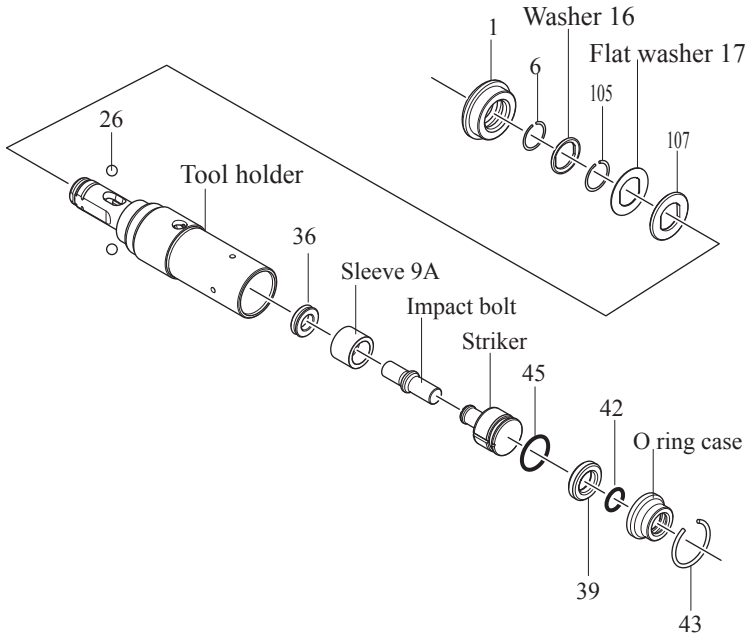

► Circuit diagram

Fig. D-1

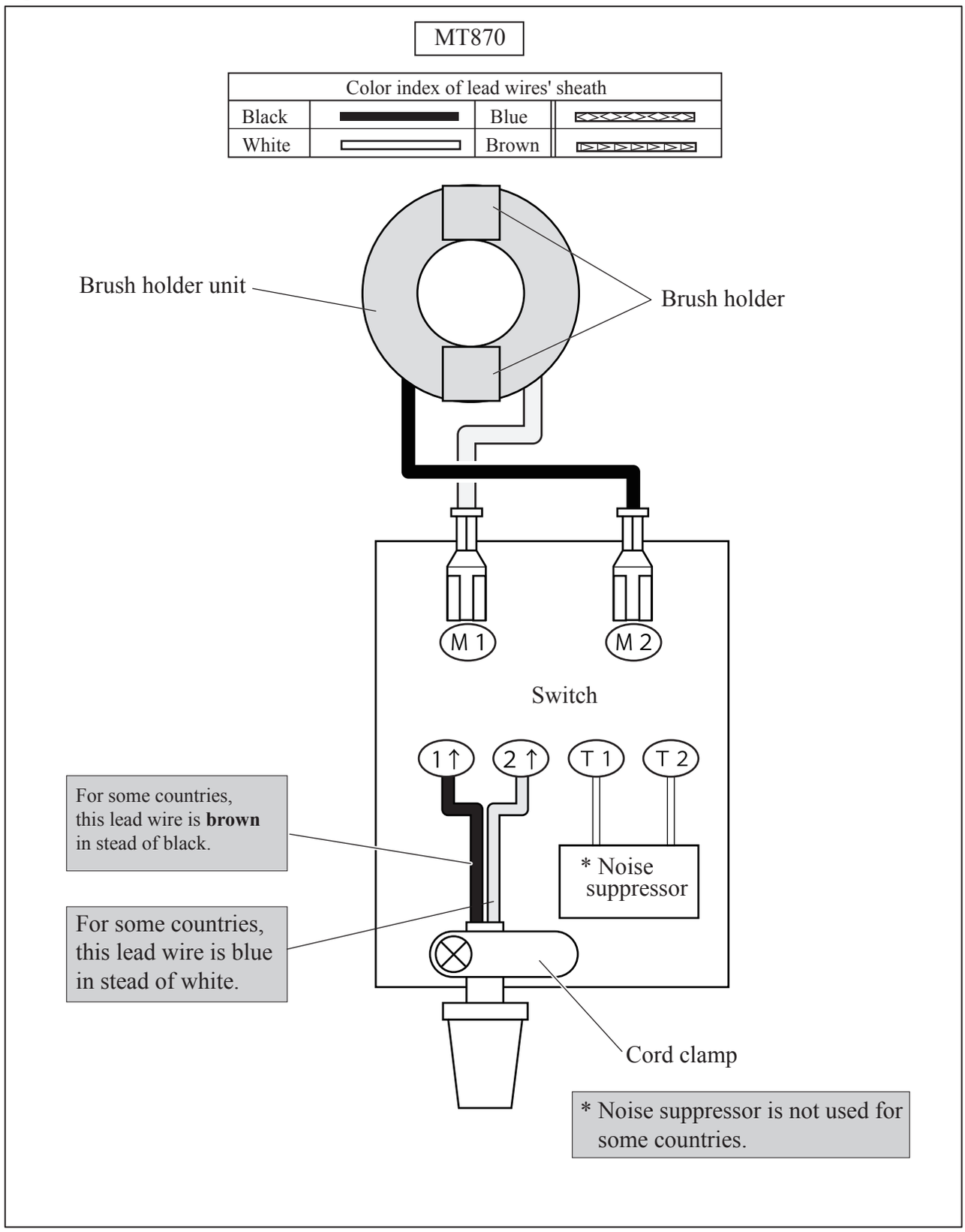

► Wiring diagram
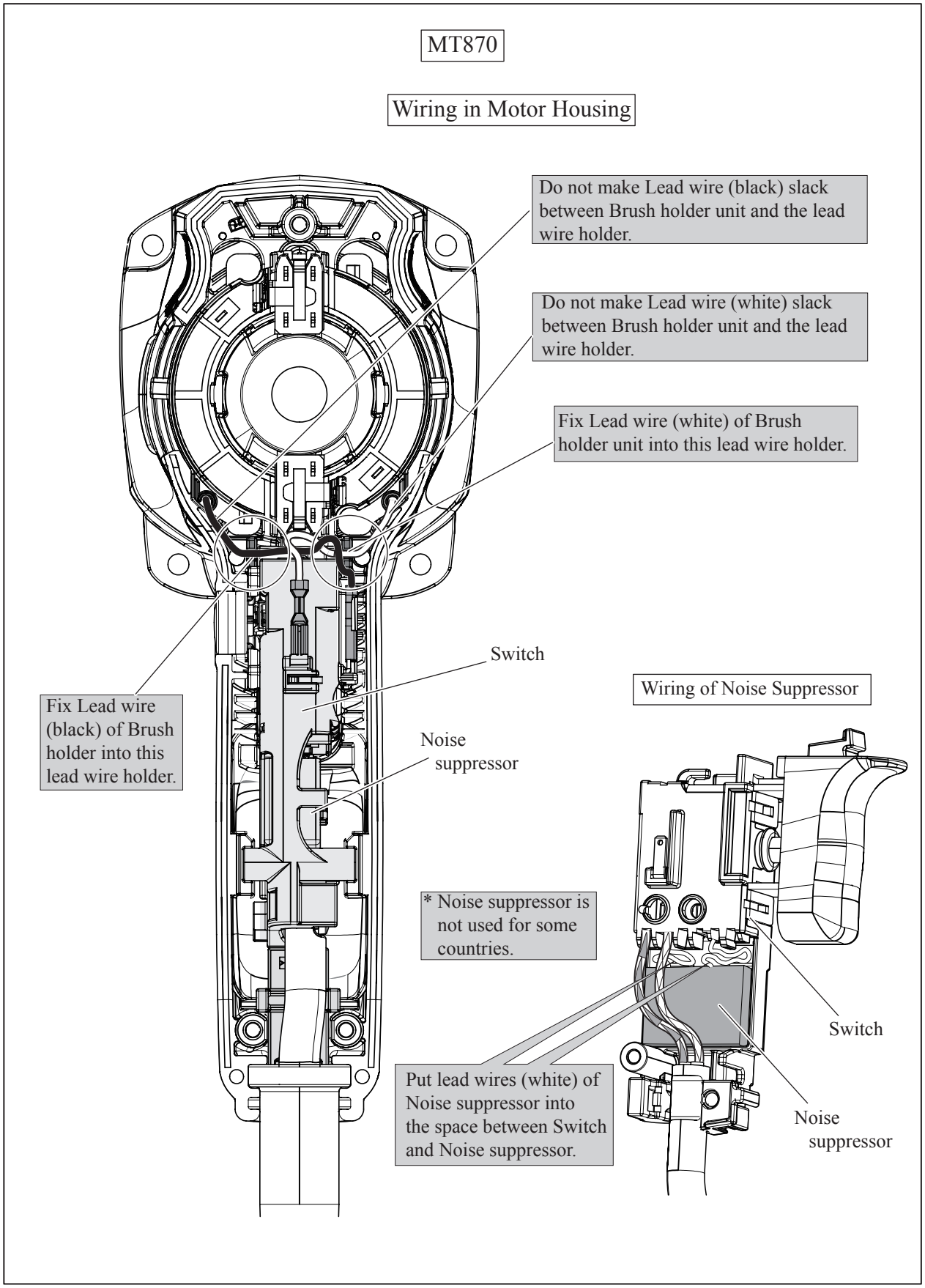
Fig. D-2