TECHNICAL INFORMATION

Models No. ► LS1013

Description ► 255mm (10") Slide compound saw

CONCEPTION AND MAIN APPLICATIONS

LS1013 is the advanced version of the existing model LS1011.
Its brief benefits are ;

* Large turn base
* Bevel cuts in either way
* More accurate cut
* Excellent chip / saw dust ejection
* Electronic features
  a. for suppressing the shock at starting
  b. for constant speed under the loaded condition, which provides you clean cut surface.
* Blocking mechanism at the rest position for European countries to comply with CE-regulations.

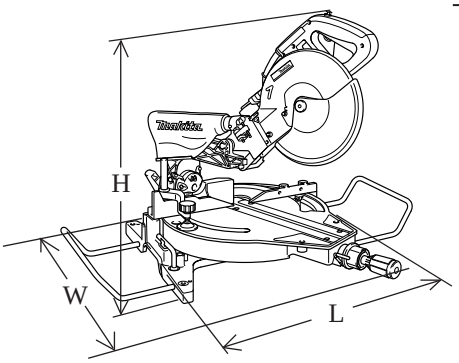

Dimensions : mm (")	
Length (L)	520 (20-1/2)
Height (H)	625 (24-5/8)
Width (W)	760 (30)) - 990 (39)

► Specification

Voltage (V)	Current (A)	Cycle (Hz)	Continuous Rating (W)		Max. Output(W)
			Input	Output	
115	13.0	50 / 60	1,430	950	2,000
200	7.5	50 / 60	1,430	950	2,000
220	6.8	50 / 60	1,430	950	2,000
230	6.5	50 / 60	1,430	950	2,000
240	6.3	50 / 60	1,430	950	2,000

Blade	Diameter : mm (")	250 (9-7/8) - 260 (10-1/4)
	Arbor : mm (")	North America :15.88 (5/8) Europe : 30 (1-3/16) Others : 25 or 25.4 (1)
No load speed (min^{-1} = rpm)		3,700
Protection from electric shock		by double insulation
Lock off switch		Yes
Electric brake		Yes
Electronic	Speed control	Yes
	Soft start	Yes
Cord length : m (ft)		2.5 (8.2)
Net weight : Kg (lbs) w/o saw blade		21 (46.3)

Capacity : mm (")

Miter angle / Bevel angle	0°	45° (left and right)	52° (right)
0°	91 x 305 (3-5/8 x 12)	91 x 215 (3-5/8 x 8-1/2)	91 x 185 (3-5/8 x 7-1/4)
45° (right)	31 x 305 (1-1/4 x 12)	31 x 215 (1-1/4 x 8-1/2)	
45° (left)	50 x 305 (2 x 12)	50 x 215 (2 x 8-1/2)	

► Standard equipment

* Vertical vise ..... 1 pc.
* Socket wrench ..... 1 pc.
* Dust bag ..... 1 pc.
* Triangular rule ..... 1 pc.
* Holder set ..... 2 pcs.
* Spare of lock off button ..... 2 pcs.
* T.C.T. saw blade ..... 1 pc. (for USA.and Canada)

< Note > The standard equipment for the tool shown may differ from country to country.

► Optional accessories

* Horizontal vise
* Sub fence R
* Various T.C.T. saw blade
* Crown molding stopper set
* Elbow

► Repair

< 1 > Lubrication

Apply MAKITA grease N. No.1 to the following portions marked with black triangle to protect parts and product from unusual abrasion. See Fig. 1.

* Axial portion for swing action of saw unit
  1. Blade case : The portion contacting arm
  2. Arm : The portion contacting blade case
  3. Pipe 16-113 : The whole of surface contacting arm and blade case

* Axial portion for tilt of saw unit
  4. Arm : The portion contacting arm holder complete
  5. Arm holder complete : The center axis for arm's tilt.
  6. Arm holder complete : The portion contacting arm
  7. Guide plate : The side contacting steel ball 1.0
  8. Hex bolt M10 x 90 : Lever 100 assembling side

* Axial portion for miter angle
  9. Base : The boss at the center of base
  10. Turn base : The edge contacting base
  11. Turn base : Both left and right side contacting base

* The other portions
  12. Link plate : Another side of hex socket head bolt M6x20
  13. Blade case : In the hole for compression spring 28
  14. Sub fence : Pivot portion
  15. Stopper holder
  16. Slide plate

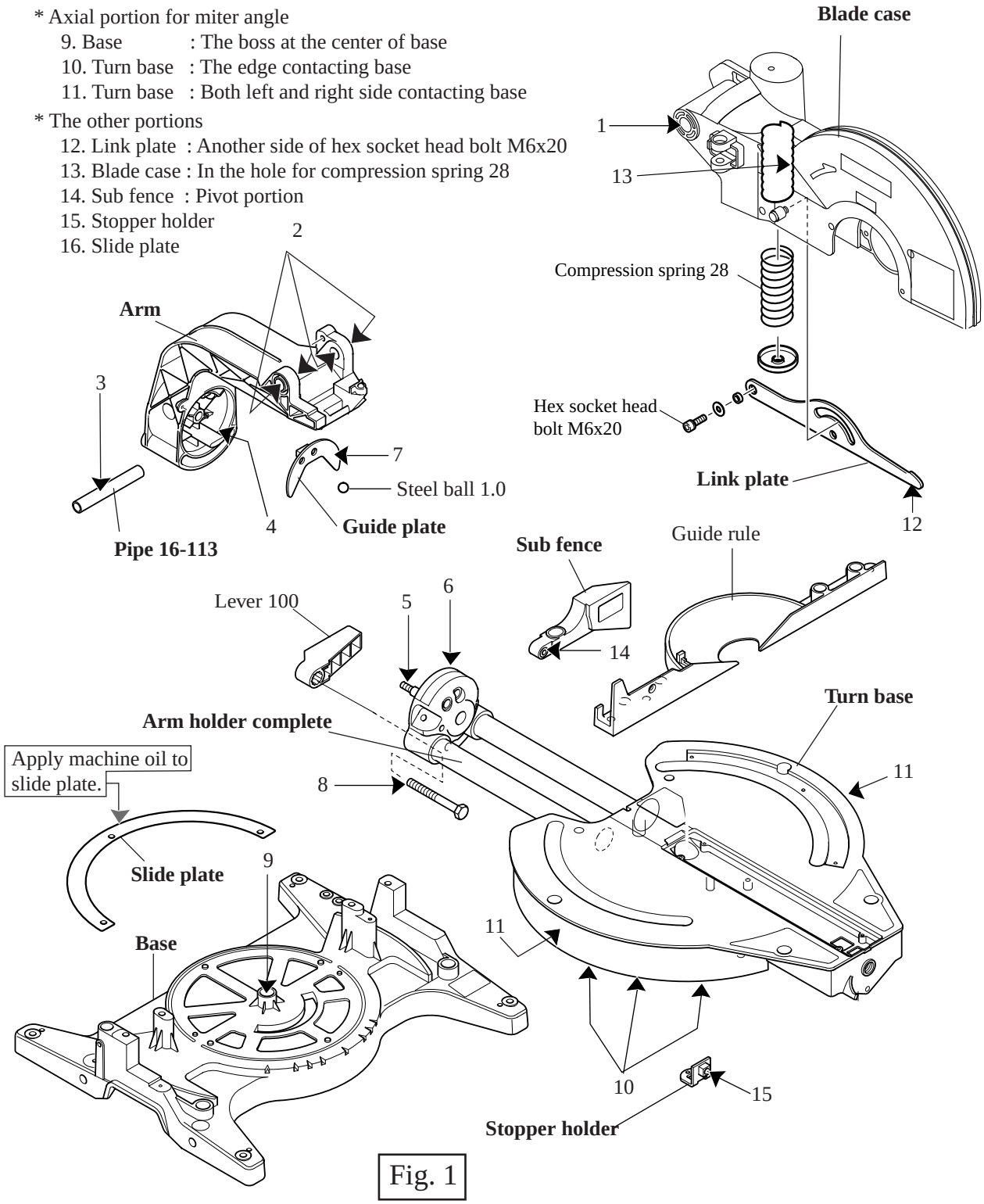

Fig. 1

< Note > Take off saw blade from the machine for your safety, before repairing or maintenance !

< 2 >Disassembling armature

1) Take off brush holder caps and carbon brushes. See Fig. 2.
2) Unscrew 4 pcs. of pan head screws M6x50 with which motor housing is fastened to blade case. See Fig. 3.
3) Separate motor housing from blade case. See Fig. 3.

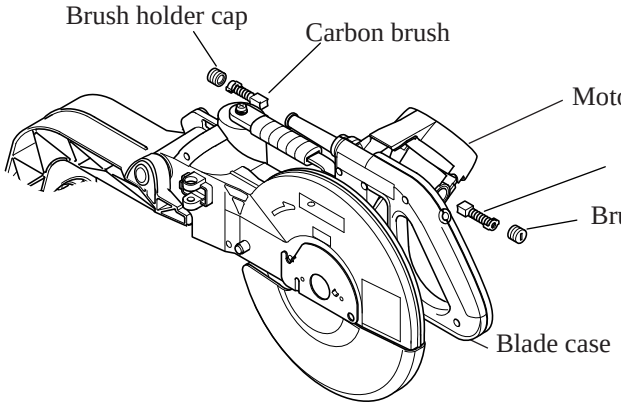

Fig. 2

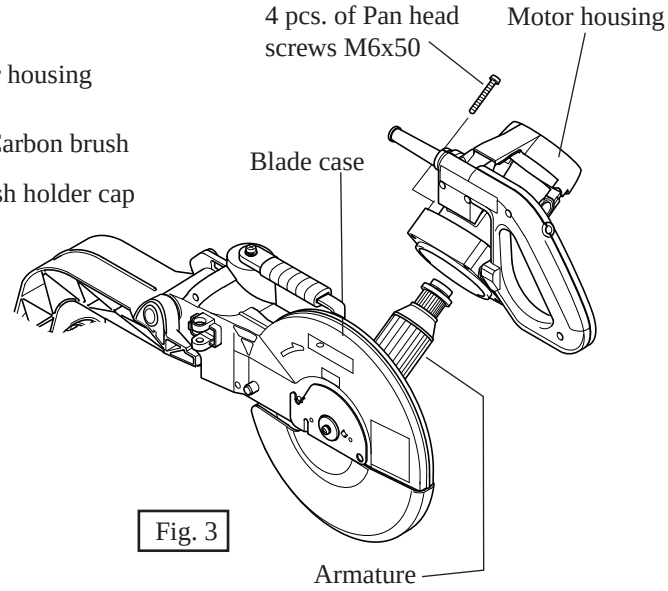

Fig. 3

Armature remains in blade case, after removing motor housing.

4) Unscrew 2 pcs. of pan head screws M5 x 16, then bearing retainer 94 can be separated from blade case together with armature assembly. See Fig. 4.

5) Disassemble retaining ring S-17 and ball bearing 6003DDW from armature assembly. Then bearing retainer 94 can be separated from armature assembly. See Fig. 5.

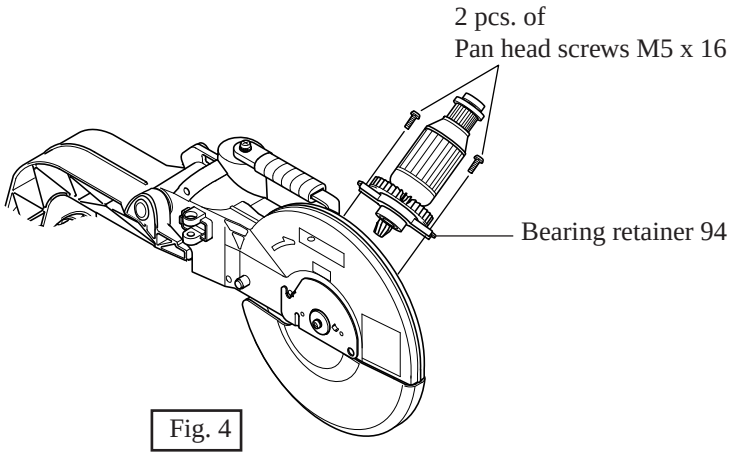

Fig. 4

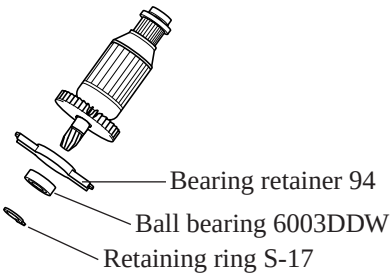

Fig. 5

< 3 >Assembling armature

1) Assemble bearing retainer 94, ball bearing 6003DDW. And fix the ball bearing and bearing retainer 94 with retaining ring S-17. See Fig. 5.
2) Assemble the above armature to blade case by fastening bearing retainer 94 with 2 pcs. of pan head screws M5x16. See Fig. 4.
3) Separate motor housing from blade case. See Fig. 3.
4) Assemble motor housing to blade case by fastening with 4 pcs. of pan head screws M6x50. And then, assemble carbon brushes and brush holder caps. See Fig. 3 and Fig. 4.

Repair

< 3 > Disassembling gear unit

1) Disassemble armature as illustrated in Fig. 2, Fig. 3, and Fig. 4 at page 3.
2) Disassemble gear unit from blade case by unscrewing 2 pcs. of pan head screws M5x16. See Fig. 6.
3) Take off retaining ring S-14. Then, spiral bevel gear 33, rubber ring 20, flat washer 14 and key 4 can be separated from spindle. And spindle can be separated from bearing box as illustrated in Fig. 7.

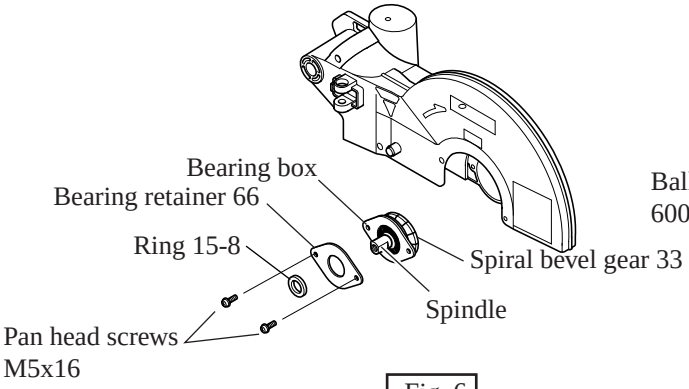

Fig. 6

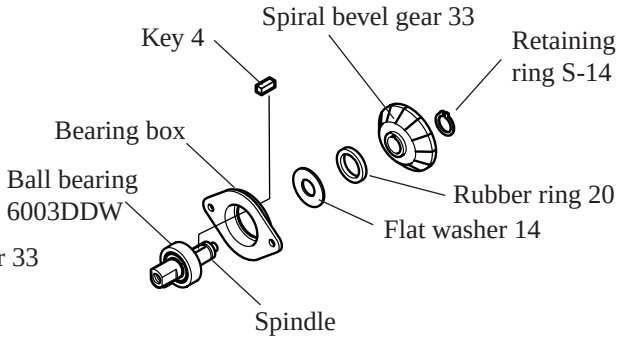

Fig. 7

< 4 > Assembling gear unit

1) Assemble rubber ring 20 to spiral bevel gear 33. See Fig. 8.
2) Assemble flat washer 14, key 4 and the above spiral bevel gear 33 to spindle. See Fig. 9.
3) Press spiral bevel gear 33 strongly until you can see the assembling groove for retaining ring S-14. So, retaining ring S-14 can be assembled to the groove on spindle. See Fig. 10.

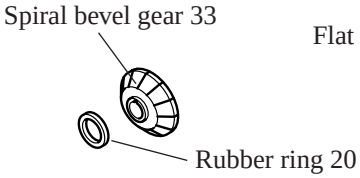

Fig. 8

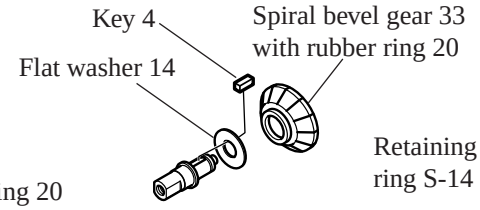

Fig. 9

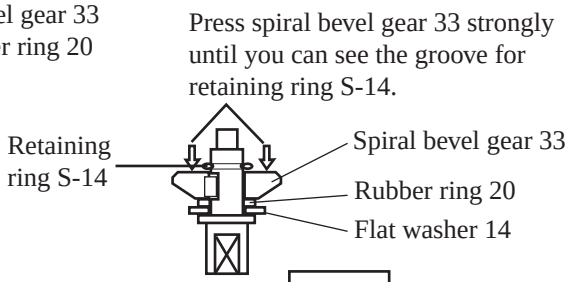

Fig. 10

< 5 > Disassembling blade case and compression spring 28

1) Pressing the motor unit down to the lowest position, insert 2 bars into the side holes of saw blade as illustrated in Fig. 11.

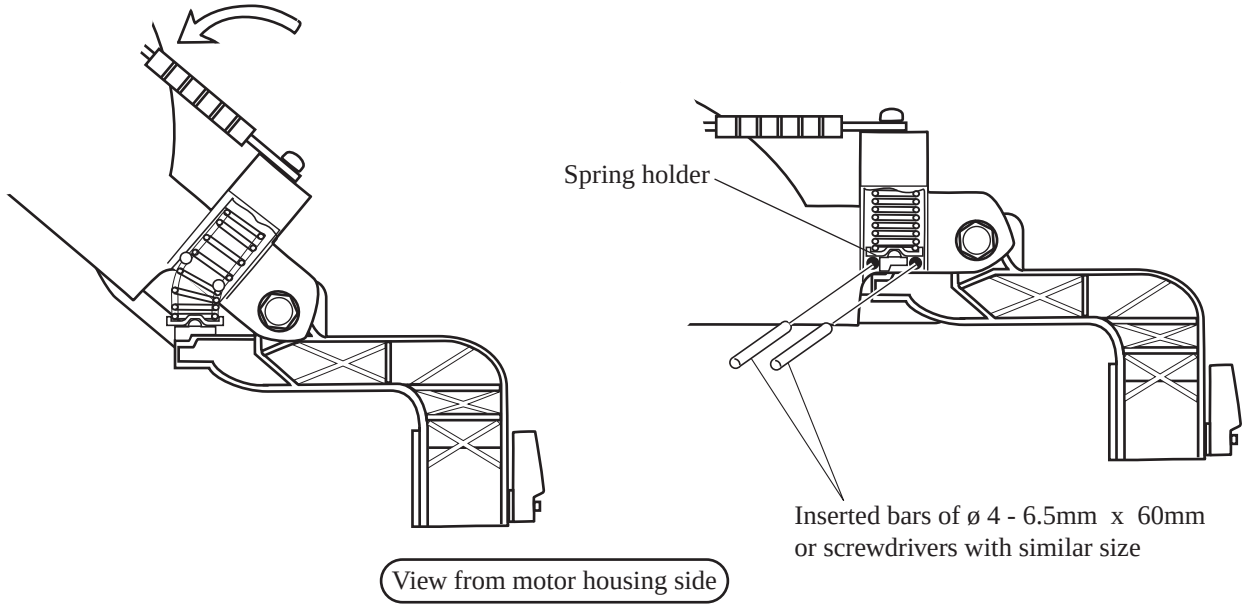

Fig. 11

2) Take off stop ring E-5, flat washer 6 and ring 6 from the inside of blade case. Then, the link of motor unit with arm is disconnected. See Fig. 11A. Unscrew hex socket head bolt M6x20 with adhesive, with impact driver. Then, link plate can be separated from arm as illustrated in Fig. 11B.

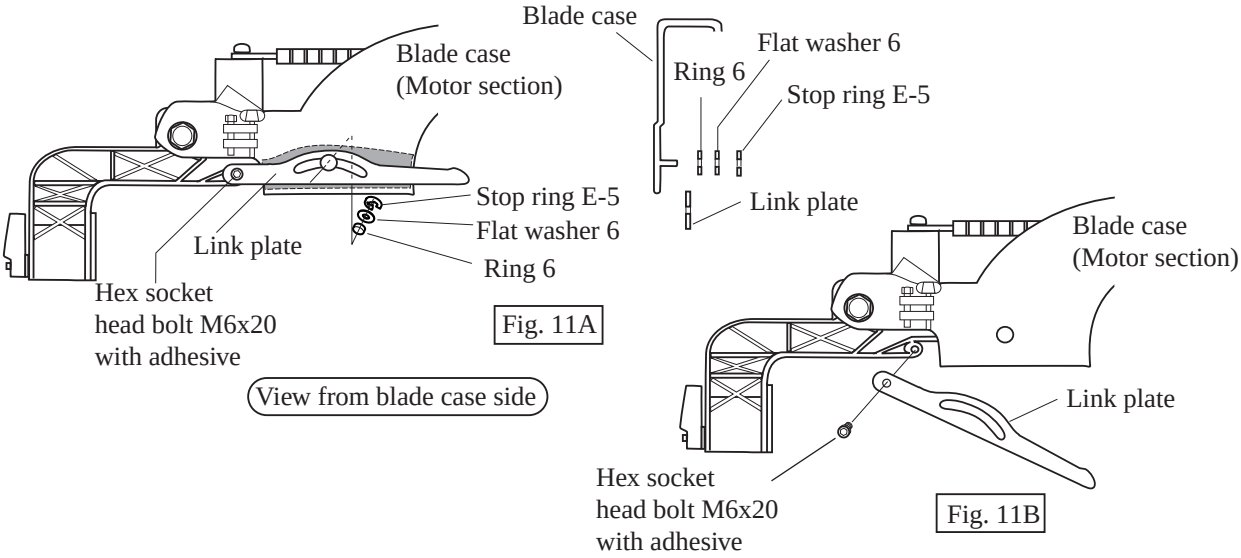

Fig. 11A

Fig. 11B

3) Take off pipe 16-113 and hex bolt M10x30 after unscrewing hex nut M10-17, with holding the motor unit. And then, separate the motor unit from arm. See Fig. 12.

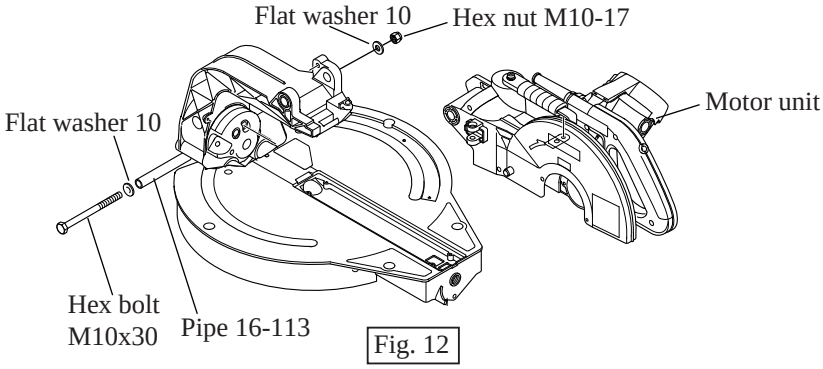

Fig. 12

4) Set the motor unit separated from arm, as illustrated in Fig. 13, and pressing spring holder with block, take off 2 bars from the side holes of blade case. See Fig. 13.

5) Lift up the block on spring holder carefully and slowly. Then, compression spring 28 can be disassembled form the motor unit. See Fig. 14 and Fig. 15.

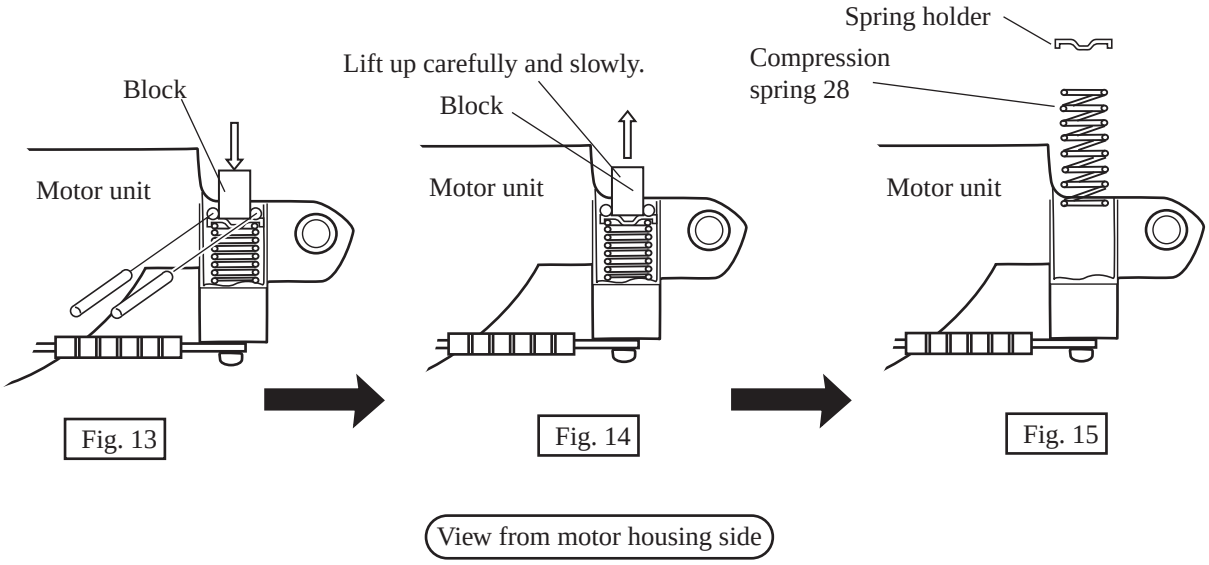

Fig. 13

Fig. 14

Fig. 15

< 6 > Assembling blade case and compression spring 28

1) Set the motor unit as illustrated in Fig.15, and put compression spring 28 into the assembling hole of motor unit (blade case) and put spring holder on compression spring 28. See Fig. 15.

2) Pressing spring holder and compression spring 28 down, insert 2 bars into the side holes of blade case in order to keep the compressed condition of the spring. See Fig. 13.

3) Take off the block. Holding the motor unit, assemble it to arm with referring to Fig. 12. And fasten the motor unit with hex nut M10-17.

4) Fasten link plate with ring 6, flat washer 6 and stop ring E-5 to inside of blade case, in order to link motor unit with arm.. See Fig. 11A. Fasten link plate with hex socket head bolt M6x20 to arm.

<Note> Do not fasten link plate with the used hex socket head bolt M6x20.
Always use fresh socket head bolt M6x20 with adhesive.

< 7 > Assembling turn base section

1) Fasten bearing box B with hex socket head bolt M8x30 to the back side of turn base temporarily. See Fig. 16.

2) Insert arm holder complete into the hole of turn base until it stops, and then fix bearing box B firmly with hex socket head bolt M8x30. See Fig. 16.

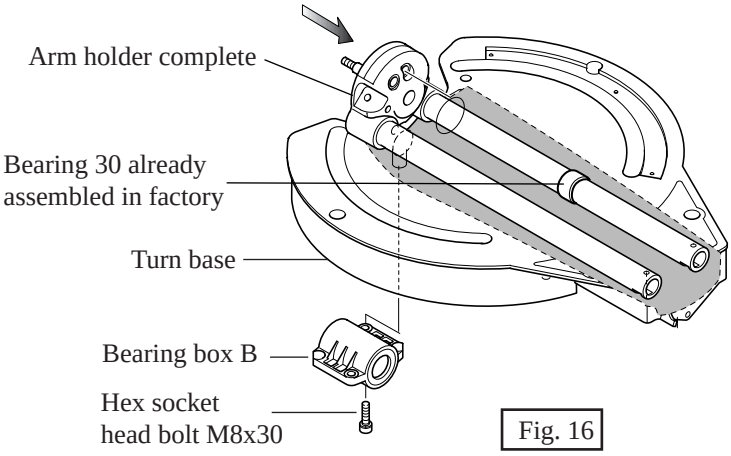

Fig. 16

3) Bring the groove of slide pipe's end to the nearest position to bearing 30 by sliding arm holder complete in the direction of the arrow. Fasten square rod complete with hex bolt M6x35 to the groove of slide pipe's end. See Fig. 17 and Fig. 17A.

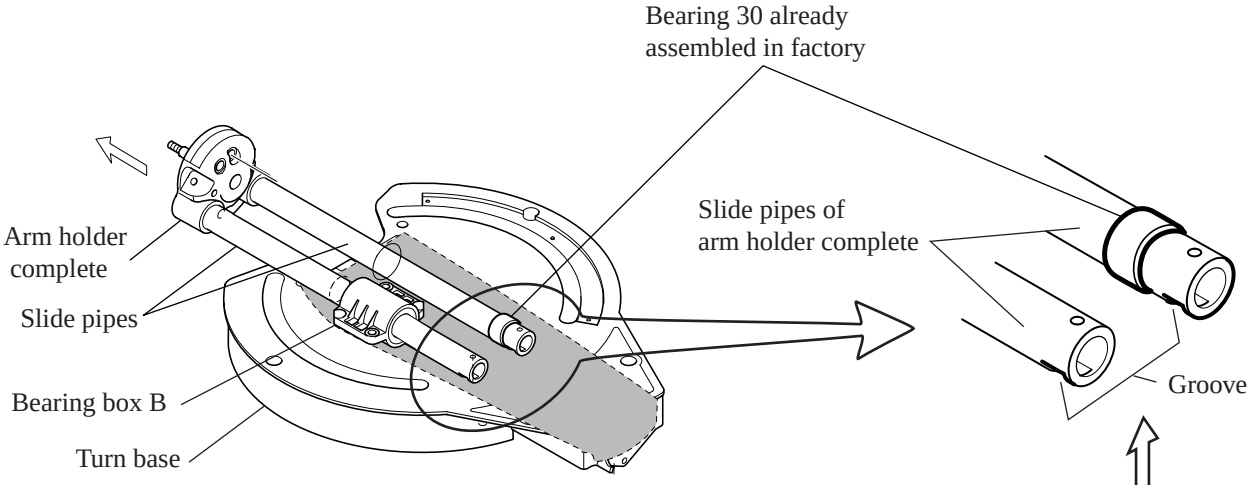

Fig. 17

Square rod complete has to be so assembled, that the rubber pin protruding side comes to bearing 30 side.

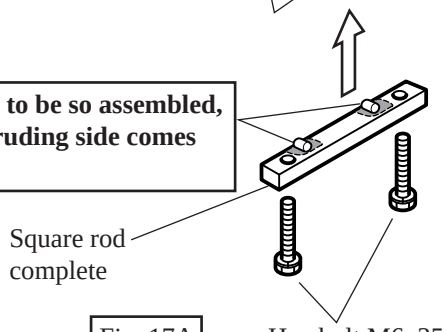

Fig. 17A

< 8 > Adjustment of strength of ball notch in arm holder complete

You can precisely set the bevel angle to 0° with the proper strength of ball notch which consists of two steel balls. However, in case of too strong, or week function of ball notch, when setting the bevel angle to 0°, the strength of ball notch can be adjusted by turning hex socket head bolt M12x12 marked with arrow. See Fig. 18.

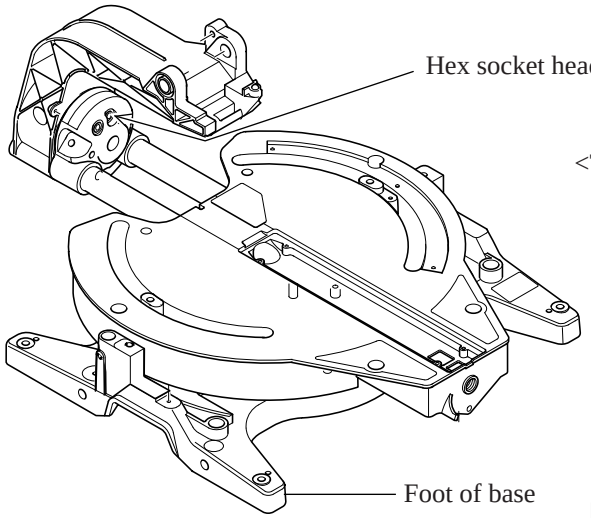

<The proper strength of ball notch>
If the foot of base are not upped with the action of bevel angle adjustment, the function of ball notch is adjusted to the proper strength.

Fig. 18

< 8 > Fastening hex bolt M8x40

Hex bolt M8x40 has to be so adjusted and fastened that turn base can be turned smoothly without wobbling. See Fig. 19.

< 9 > Fastening hex nut M8-13

Hex nut M8x13 has to be so adjusted and fastened that arm can be tilted to both left and right smoothly without wobbling.
See Fig. 19A.

Fig. 19A

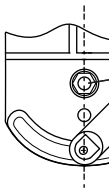

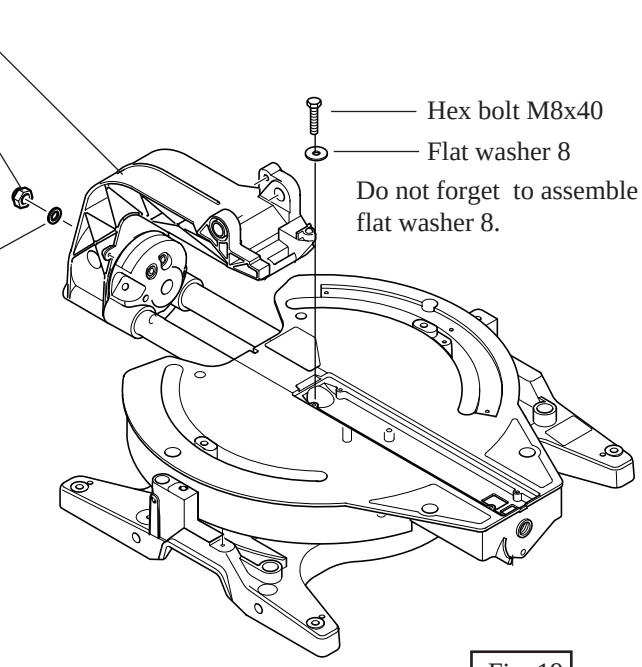

Fig. 19

Repair

< 10 > Assembling miter angle adjusting section

1) Assembling lock pin and pin holder

In case of poor assembling of pin holder, lock pin may not function smoothly for positive stop.
Pin holder has to be so assembled that it does not interfere the function of lock pin. See Fig. 20.

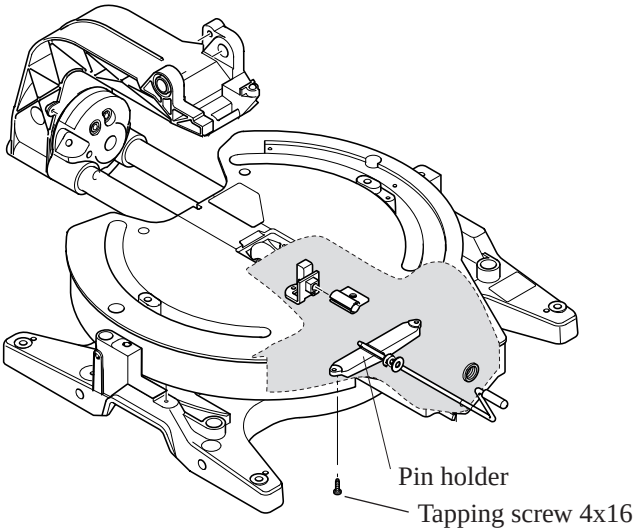

Fig. 20

2) Assembling grip and knob section

1. Adjust the length of screw M8x320 by turning hex nut M8 so that its length comes to 303mm (11-7/8") as illustrated in Fig. 21.
2. Assemble the above grip 40 and screw M8x320 to knob 48, and insert the screw M8x320 into pipe 9-200. See Fig. 22 and Fig. 22A.

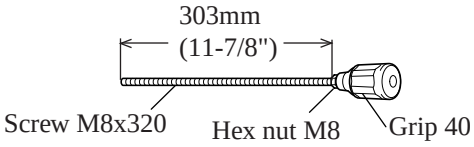

Fig. 21

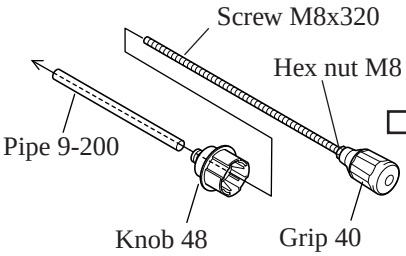

Fig. 22

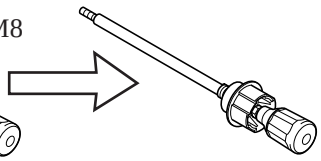

Fig. 22A

3. Assemble the above grip 40 unit illustrated in Fig. 22A to turn base by inserting into its screw hole. See Fig. 23.

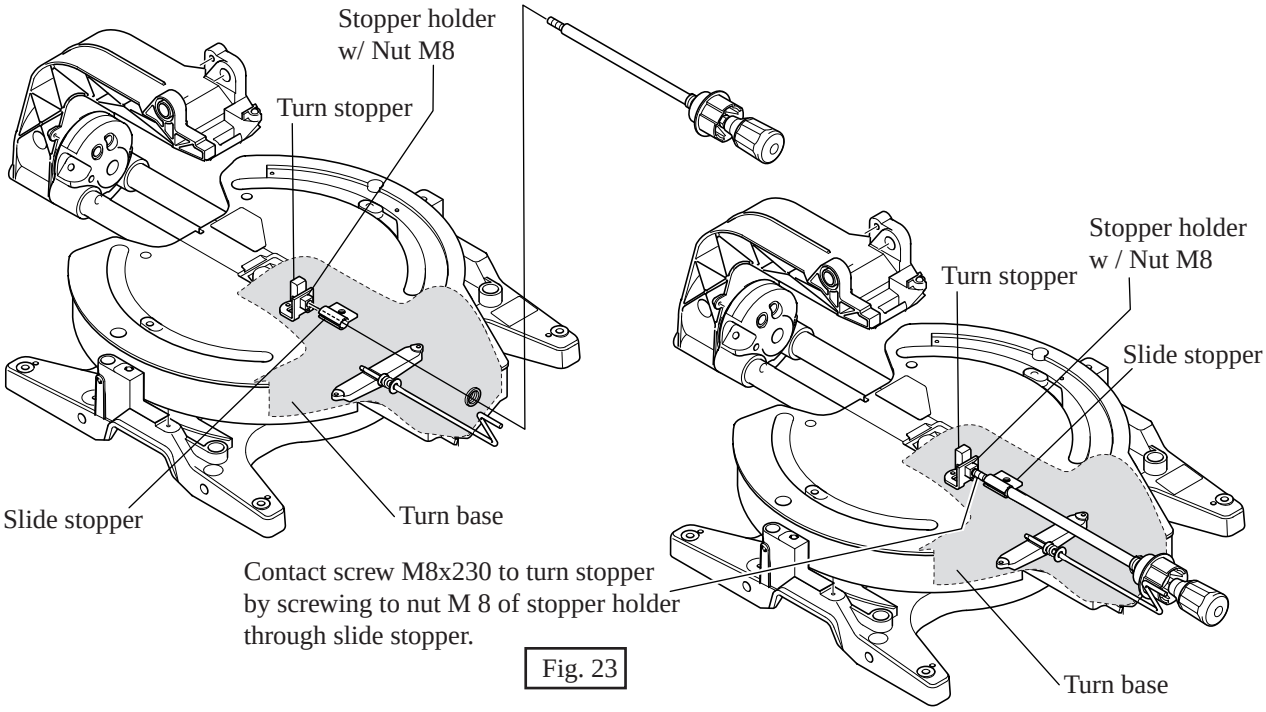

Fig. 23

< 11 > Disassembling spiral spring

The product for European countries is equipped with spiral spring for slide return action, in the back side of turn base. Disassemble it as follows.

1. Slide arm holder complete in the direction of the arrow until it stops. See Fig. 24.
2. Disconnect hook of spiral spring from slide pipe.
3. Take off drum winded with spiral spring by unscrewing pan head screw M5.

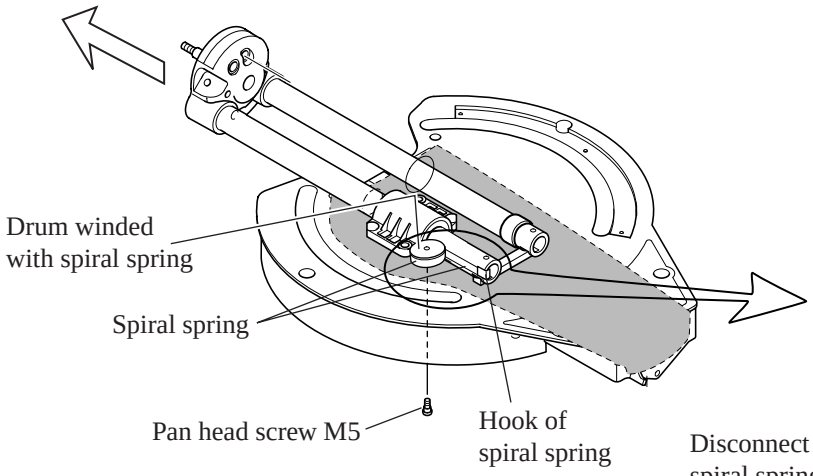

Fig. 24

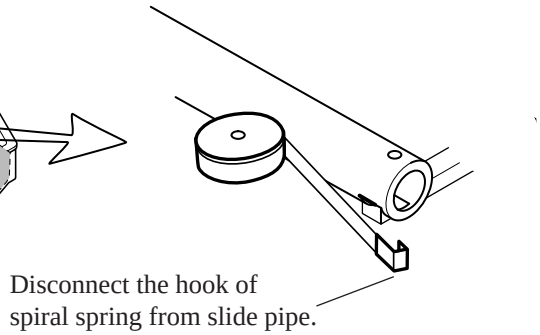

Fig. 24A

< 12 > Assembling spiral spring

1. Assemble drum winded with spiral spring to turn base by fastening with pan head screw M5.
2. Slide arm holder complete in the direction of the arrow until it stops.
3. Connect hook of spiral spring with slide pipe.

<Note in handling for spiral spring>
Do not pull out spiral spring from drum more than 300mm (11-3/4").
Because, spiral spring may be off from drum.

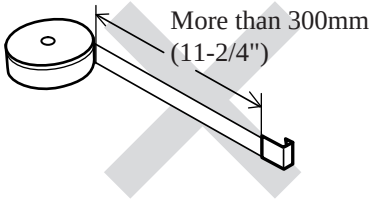

Circuit diagram

Color index of lead wires	
Black	
White	
Red	
Yellow	
Orange	
Purple	

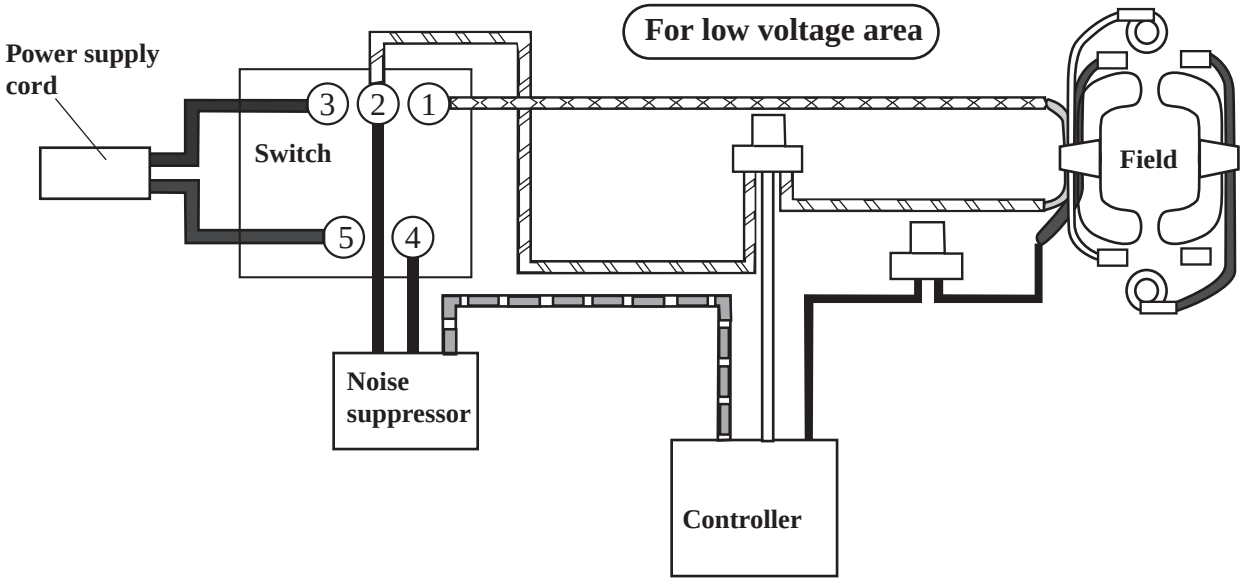

< Note > Noise suppressor is not installed in the products for some countries.

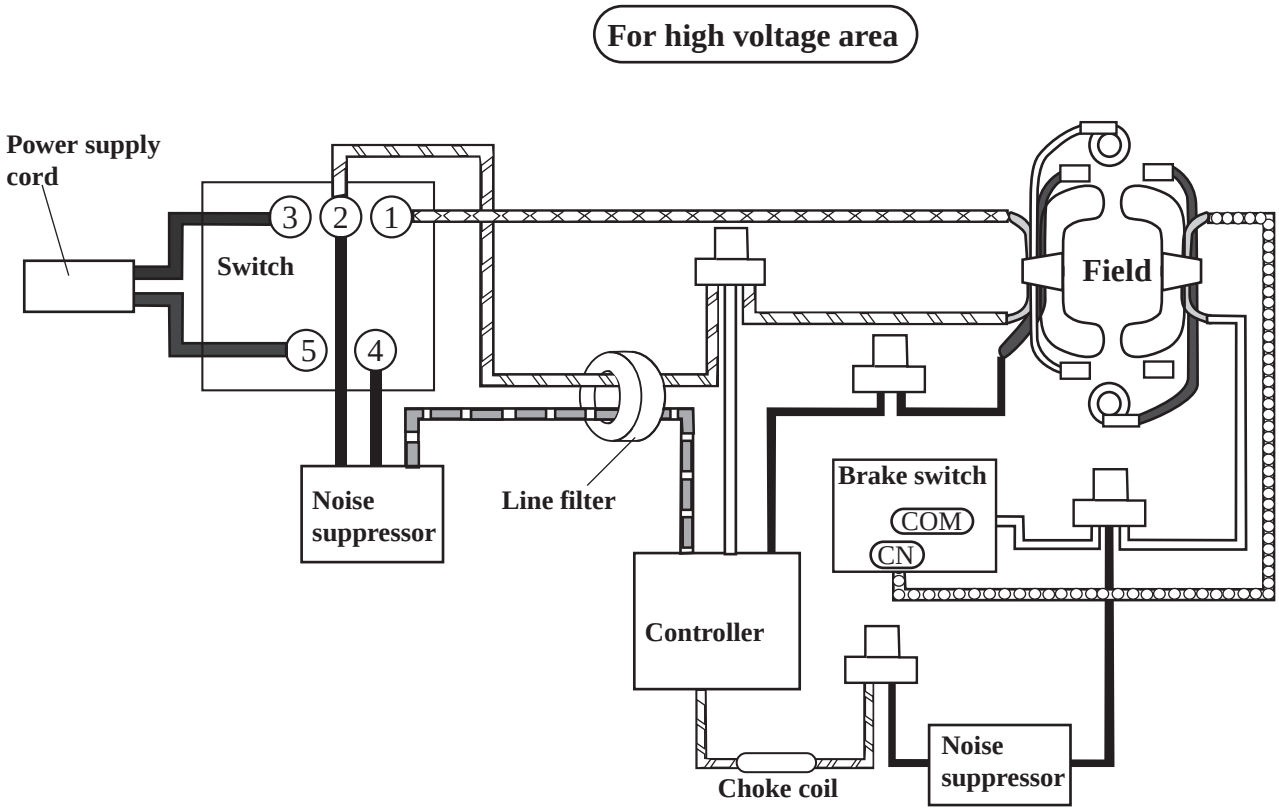

< Note > Noise suppressor, choke coil and lien filter are not installed in the products for some countries.