TECHNICAL INFORMATION

Model No. ► HR4501C, HR4510C, HR4511C

Description ► Rotary Hammers 45mm (1-3/4")

CONCEPT AND MAIN APPLICATIONS

HR4501C series models have been developed as successor models of HR4500C, featuring low vibration level and high work efficiency. Listed below are their main features.

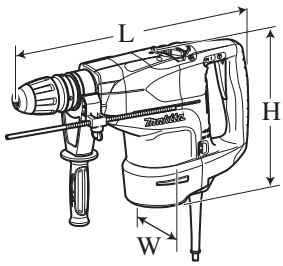

HR4501C

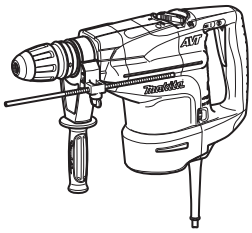

HR4510C

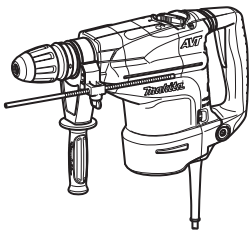

HR4511C

Model No.	HR4501C	HR4510C	HR4511C
Active dynamic vibration absorber	No	Yes	Yes
Vibration absorbing handle	No	No	Yes
Selectable two on-off switches	Yes	Yes	No

Dimensions: mm (")			
Model No.	HR4501C	HR4510C	HR4511C
Length (L)	458 (18)		
Width (W)	121 (4-3/4)	136 (5-3/8)	
Height (H)	288 (11-3/8)		

► Specification

Voltage (V)	Current (A)	Cycle (Hz)	Continuous Rating (W)		Max. Output (W)
			Input	Output	
110	14	50/60	1,350	600	1,600
120	13.5	50/60	---	600	1,600
220	7	50/60	1,350	600	1,700
230	7	50/60	1,350	600	1,700
240	7	50/60	1,350	600	1,700

Model No.		HR4501C	HR4510C	HR4511C
No load speed: min-1=rpm		130 - 280		
Impacts per min: min-1=ipm		1,250 - 2,750		
Shank type		SDS-Max		
Capacities: mm (")	Max TCT bit diameter	45 (1-3/4)		
	Max Core bit diameter	125 (5)		
Torque limiter		Yes		
Electronic features	Variable speed control by dial	Yes		
	Soft start	Yes		
	Constant speed control	Yes		
Double insulation		Yes		
Net weight: kg (lbs)		7.8 (17.2)	8.4 (18.5)	8.5 (18.7)
Power supply cord: m (ft)		Europe: 4.0 (13.1), Other countries: 5.0 (16.4)		

► Standard equipment

Side handle (D-shaped) 1
Side handle (Bar-shaped) 1
Depth gauge 1
Bit grease 1
Plastic carrying case 1
Cleaning cloth 1

Note: The standard equipment for the tool shown above may differ by country.

► Optional accessories

TCT bits, Core bits, Bull points, Cold chisels, Scaling chisels, Scaling chisel (for Tile), Grooving chisel, Clay spade, Bushing tool, Rammer, Shank (for Bushing tool and Rammer), Chemical anchor adapter, Bit grease Hammer grease, Side handle (D-shaped), Plastic carrying case, Blow-out bulb, Safety goggle, Hammer service kit

Repair

CAUTION: Unplug the tool and remove the bit for safety before repair/ maintenance in accordance with the instruction manual!

[1] NECESSARY REPAIRING TOOLS

Code No.	Description	Use for
1R003	Retaining ring S Pliers ST-2N	Removing / Mounting Ring spring
1R040	Armature holder 50 set for Vise	Supporting 1R213 when removing Cylinder
1R045	Gear extractor (large)	Removing Armature from Gear housing complete
1R212	Tip for Retaining ring pliers	Attachment for 1R003
1R213	Cylinder extractor	Disassembling Cylinder from Crank housing
1R214	Taper sleeve	Fitting Fluoride ring 28 to Impact bolt
1R228	1/4” Hex. shank bit for M4	Screwing / Unscrewing M4x25 Hex socket head bolt of Barrel cover
1R230	1/4” Hex. shank bit for M6	Screwing / Unscrewing M6x30 Hex socket head bolt of Barrel
1R269	Bearing extractor	Removing Ball bearings
1R291	Retaining ring S and R Pliers	Removing / Mounting Retaining rings
1R346	Center attachment	Attachment for 1R045
1R350	Ring 60	Supporting 1R213 when removing Cylinder

[2] LUBRICATION

Apply the following lubricants to protect parts and product from unusual abrasion:
*Makita grease N No. 2 (Part No. 181573-3: Grease vessel 93g) with **white triangle**
*Makita grease R. No.00 (Part No. 181490-7: Hammer grease 30g) with **black triangle**

Barrel and Tool holder section

Item No.	Description		Grease	Portion to lubricate	Amount
1	Tool holder cap		N No.2	Lip portion	a little
9	Tool retainer			Portion where Bit contacts	
16	Barrel complete	(16a) Oil seal 35	R No.00	Inner surface where 21 Tool holder contacts	
		(16b) Plane bearing 36			
		(16c) Plane bearing 48			
18	Flat washer 36			Bit installation side	
20	Flat washer 36			Crank housing side	
21	Tool holder			Inner surface where 25 Impact bolt contacts	15g
22	X ring 21			Portion where 21 Tool holder contacts	a little
23	Fluoride ring 28				
25	Impact bolt			Drum portion	

Fig. 1

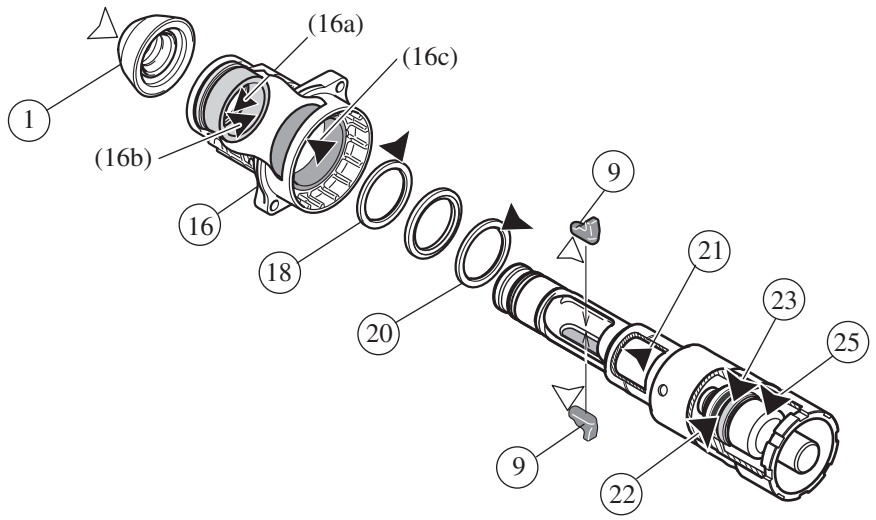

Repair

[2] LUBRICATION (cont.)

Crank housing and Motor section

Item No.	Description	Grease	Portion to lubricate	Amount
37	Straight bevel gear 35	R No.00	Gear teeth	a little
39	O Ring 27 on Striker		Whole portion	
40	Cylinder 34		Inside between Striker and Piston	5g
48	Connecting rod		Hole for Crank shaft pin	a little
49	O Ring 27 on Piston		Whole portion	
82	Crank housing complete		Inner periphery of Plane bearing 59 82a (The component of Crank housing completete)	
			Crank room 82b	25g
99	Gear housing complete		Gear teeth of Torque limiter, Spur gear 19, Helical gear 36 and Armature	25g
146	Oil seal 15		Lip portion	a little

Fig. 2

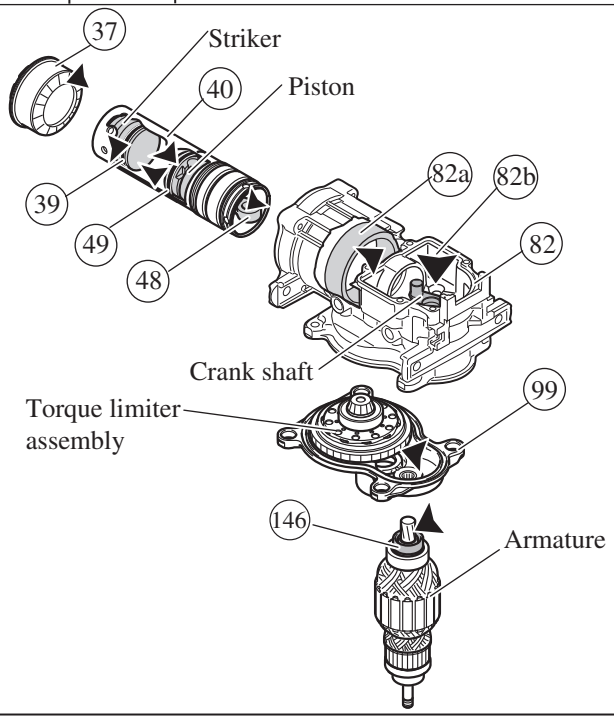

AVT mechanism (for HR4510C and HR4511C only)

Item No.	Description	Grease	Portion to lubricate	Amount
50 63	O Ring 8	R No.00	Whole portion	a little
52 61	O Ring 12			
55 57	O Ring 22			
58	Counter weight		Drum portion where Pipe 20 contacts	

Fig. 3

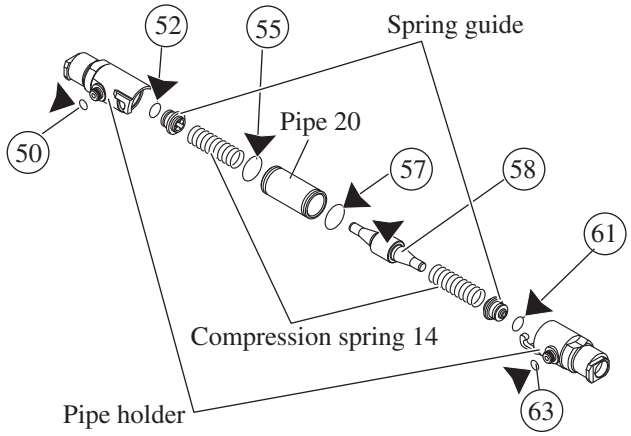

Repair

[3] DISASSEMBLY/ASSEMBLY

[3] -1. Chuck Section

DISASSEMBLY

1) Disassemble Handle section. **(Fig. 4)** Hold the machine upright and disassemble Chuck section in the order of **Figs. 5 to 11**.

Fig. 4

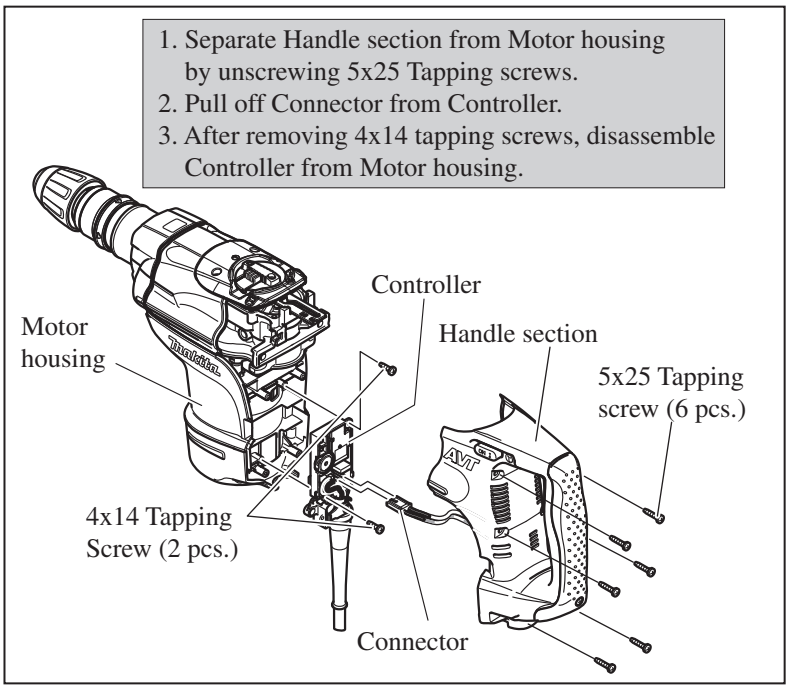

Fig. 5

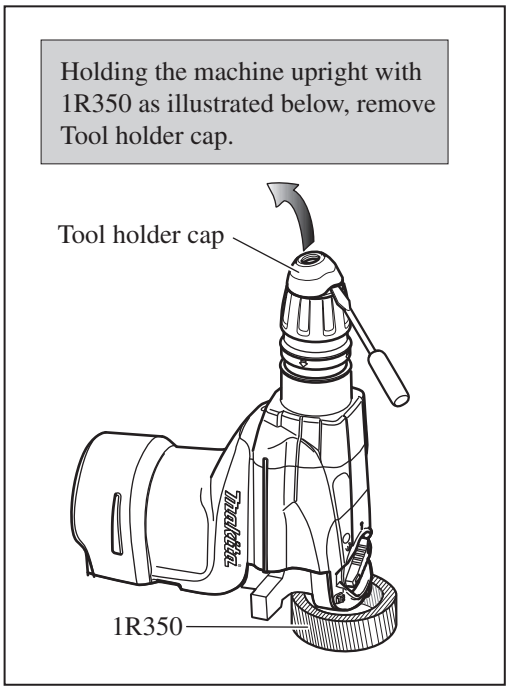

Fig. 6

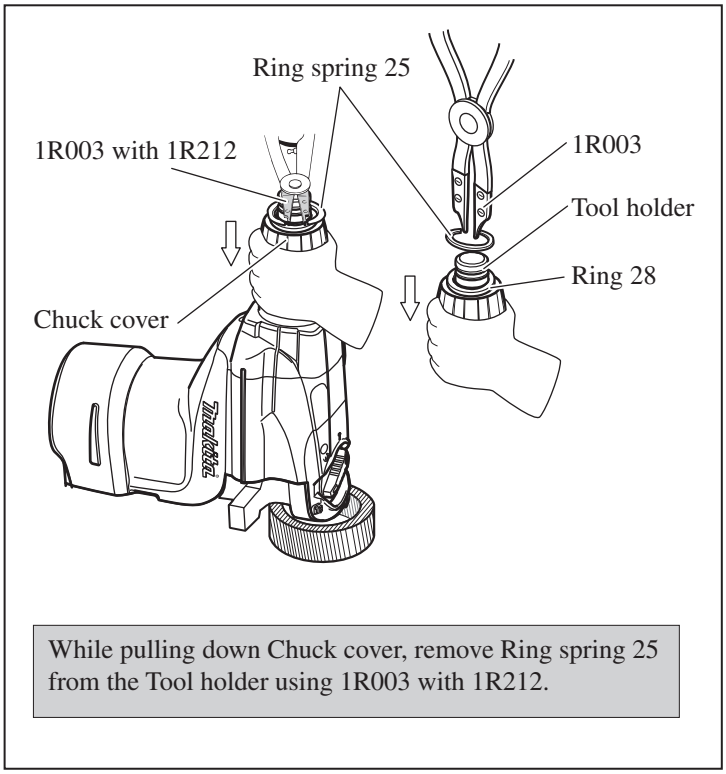

Fig. 7

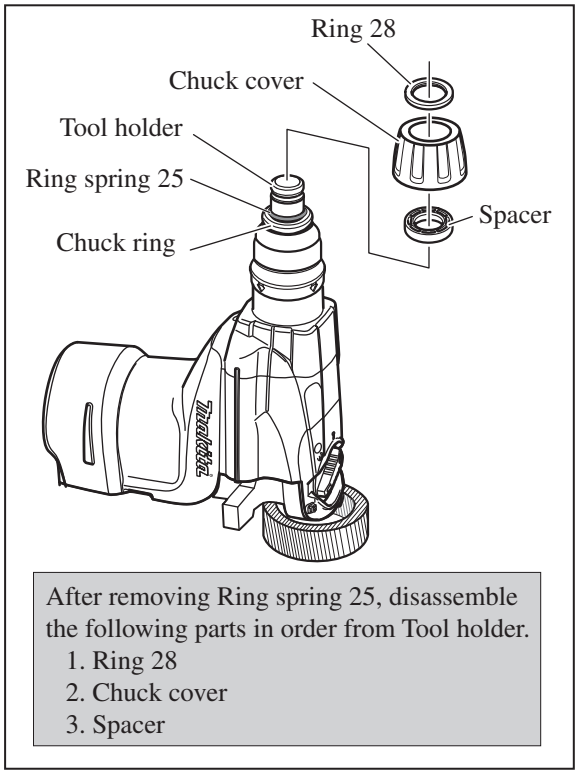

Repair

[3] DISASSEMBLY/ASSEMBLY

[3] -1. Chuck Section (cont.)

DISASSEMBLY

Fig. 8

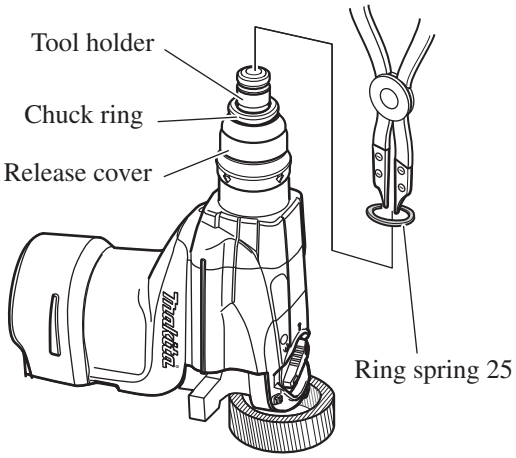

Remove another Ring spring 25 from Tool holder.

Fig. 9

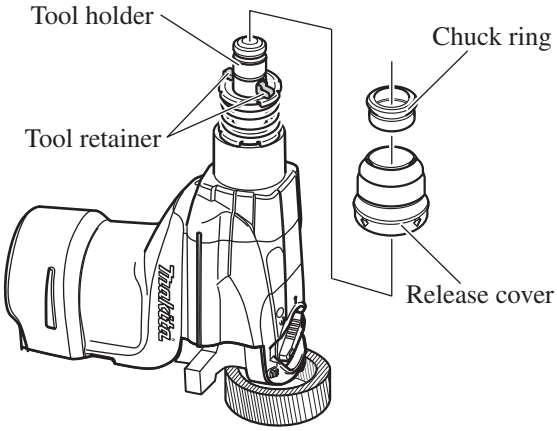

Remove Chuck ring and Release cover.

Fig. 10

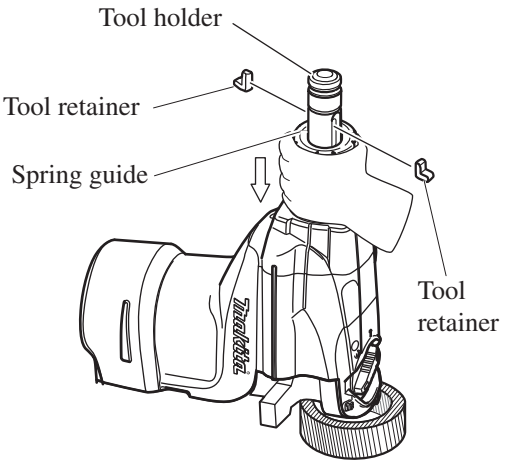

Reserve the space for Tool retainer removing by pressing down Spring guide. And take off Tool retainers (2pcs.) from Tool holder.

Fig. 11

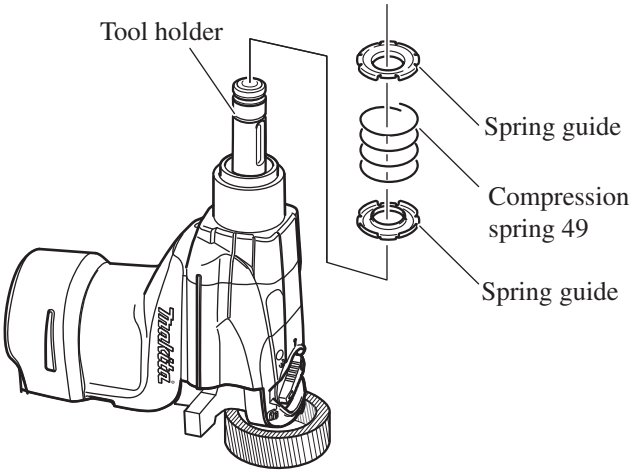

Disassemble Spring guide and Compression spring 49 from Tool holder.

ASSEMBLY

Do the reverse of the disassembling steps. Refer to **Figs. 11 to 4**.

Note: If it is difficult to mount Tool holder cap by hand, press the machine onto Tool holder cap after assembling Handle section. (**Fig. 12**)

Fig. 12

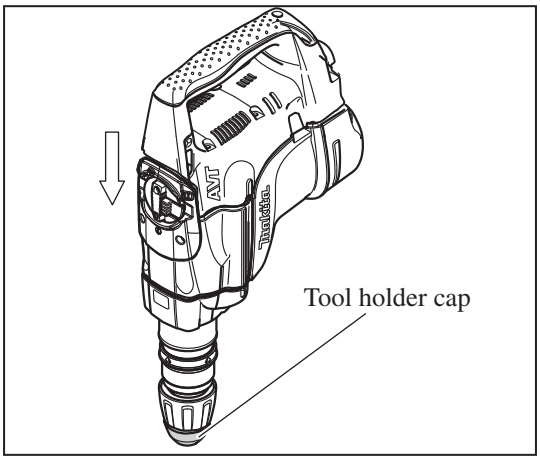

Repair

[3] DISASSEMBLY/ASSEMBLY
[3] -2. Tool Holder Section

DISASSEMBLY

1) Disassemble Chuck section. (**Figs. 4 - 11**)
2) Disassemble the Tool holder section in the order of **Figs. 13 -17**.

Fig. 13

Unscrew M4x25 Hex socket head bolt and remove Barrel cover complete.

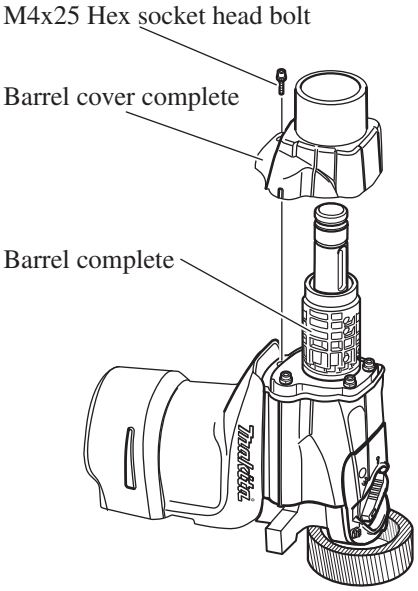

Fig. 14

Disassemble Barrel complete together with Tool holder by unscrewing M6x30 Hex socket head bolts (4 pcs.).

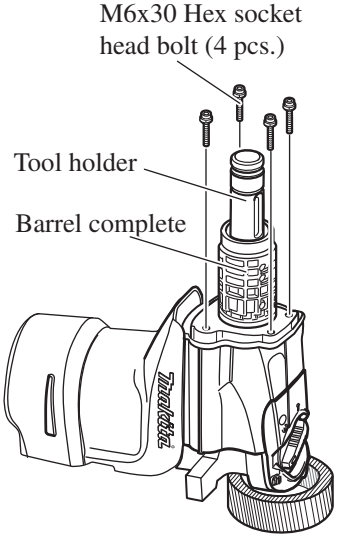

Fig. 15

Separate Tool holder from Barrel complete. Then remove Flat washer 36 (2pcs.) and Urethane ring 36 from Tool holder.

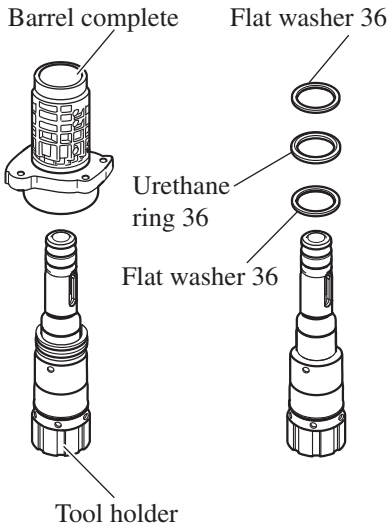

Fig. 16

Remove Impact bolt from Tool holder.

All the Rings on Impact bolt have to be replaced if O ring 23 (orange) can be seen through the worn Fluoride ring 28.

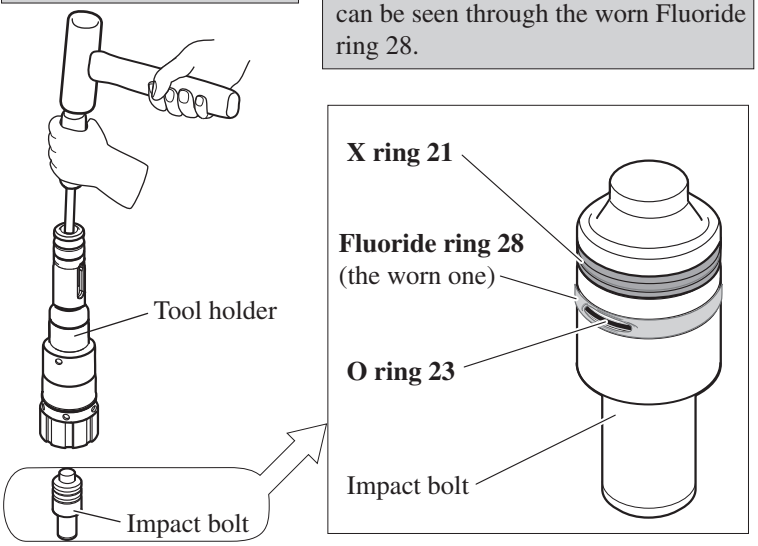

Fig. 17

Remove the following parts from Crank housing.

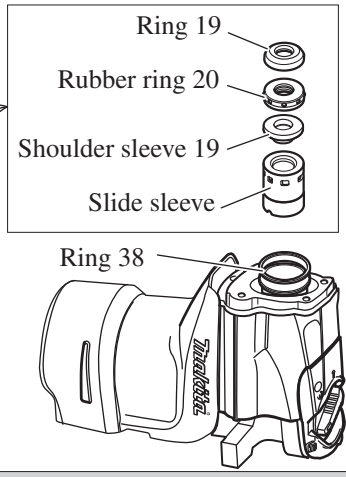

These parts may come out with Barrel complete in the step of **Fig. 14**.
In this Case, they are disassembled from Tool holder in the step of **Fig. 16**.

Repair

[3] DISASSEMBLY/ASSEMBLY
[3] -2. Tool Holder Section (cont.)

DISASSEMBLY

3) Parts assembled to Cylinder 34 are removed. (**Fig. 18**)

Fig. 18

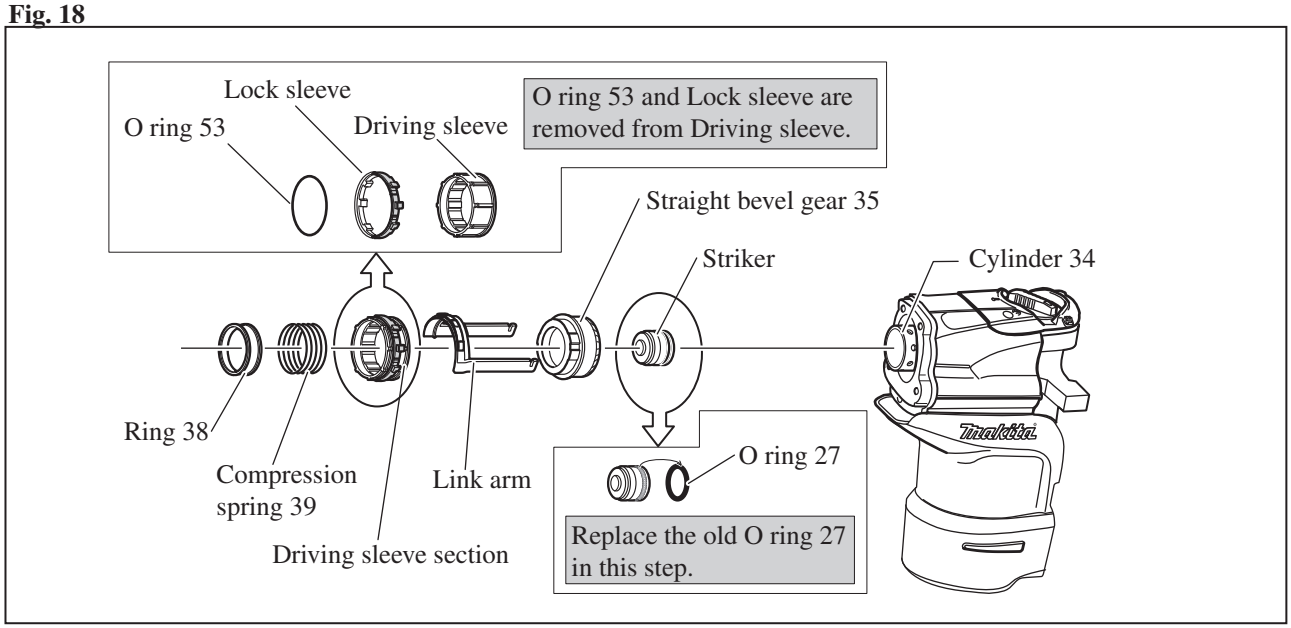

ASSEMBLY

1) Pay attention to the descriptions in **Figs. 19 and 20**.
2) Insert Striker into Cylinder 34. And to Crank housing, assemble Straight bevel gear 35, the Driving sleeve section with Link arm, Compression spring 39 and Ring 38. Refer to **Fig. 18**.

Fig. 19

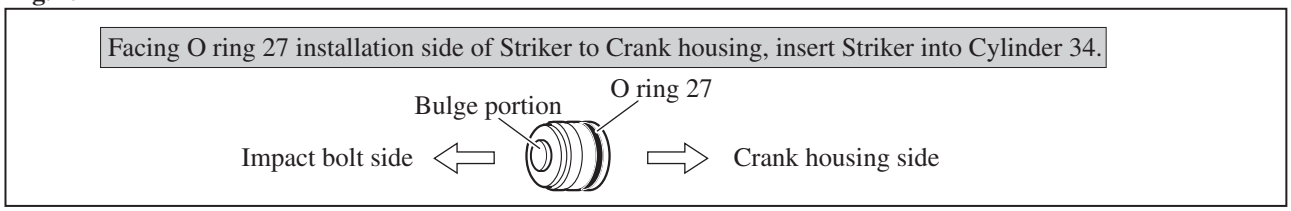

Fig. 20

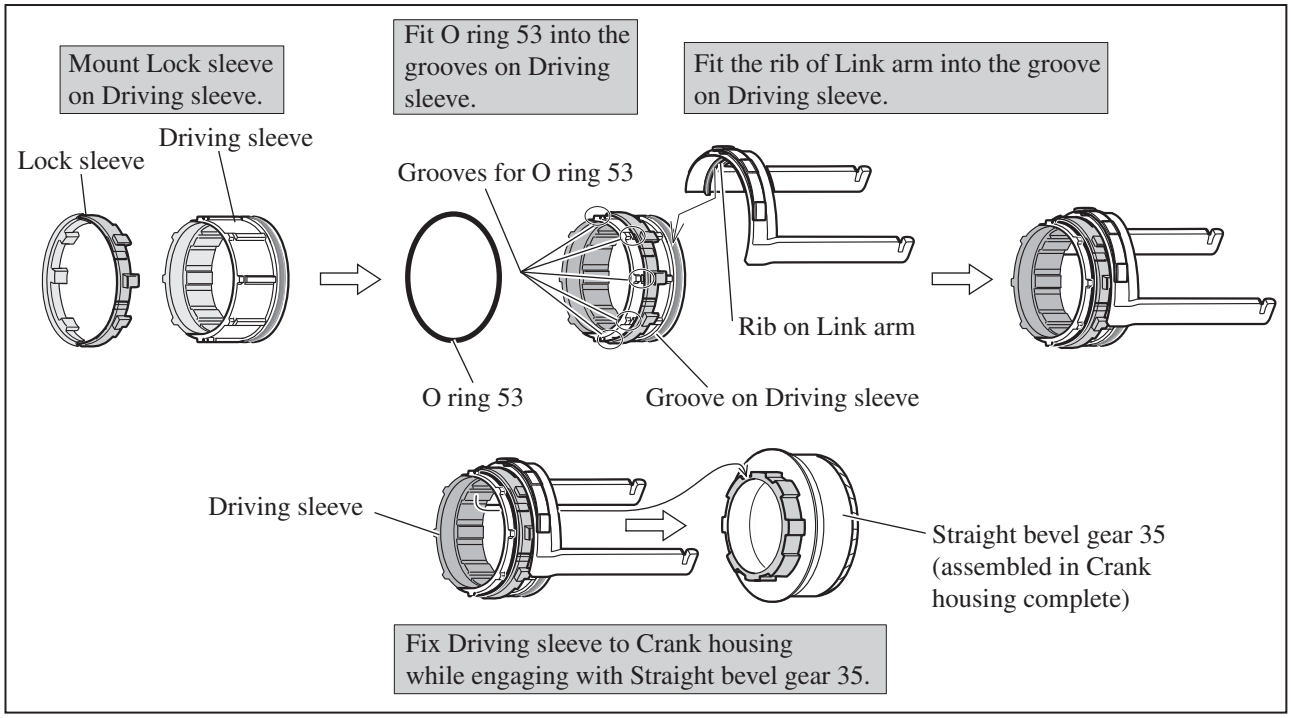

Repair

[3] DISASSEMBLY/ASSEMBLY

[3] -2. Tool Holder Section (cont.)

ASSEMBLY

3) After installing Fluoride ring 28 on the groove of Impact bolt, the Ring is stretched and its edges are protruding from the groove. Correct the deformation as illustrated in **Fig. 21**.

Fig. 21

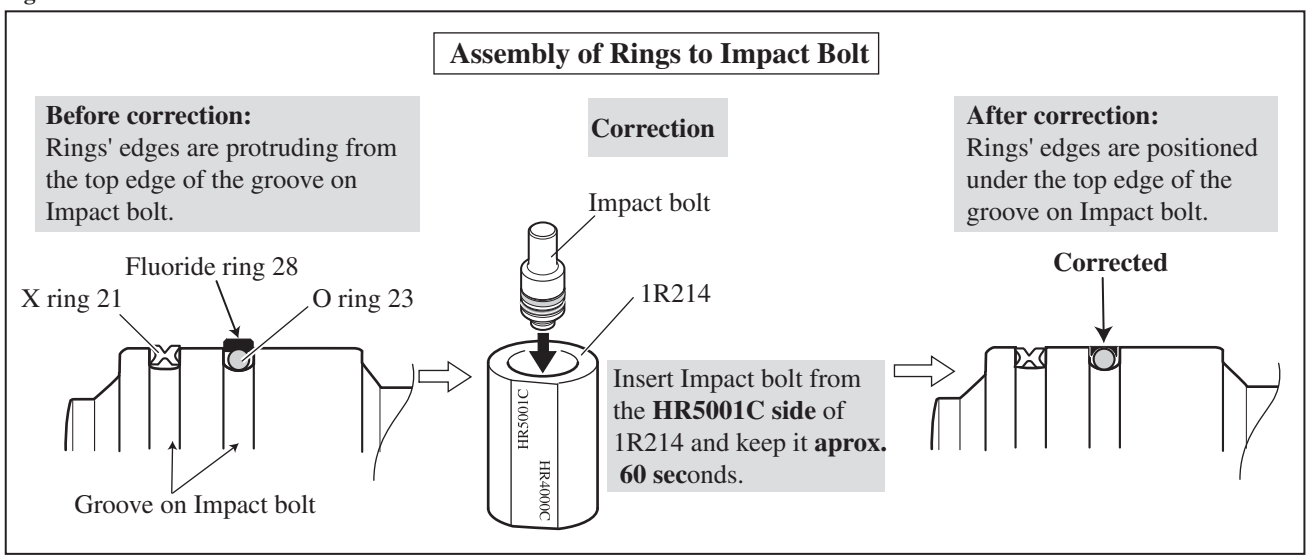

4) Assemble Impact bolt section, and insert it into Tool holder. (**Fig. 22**)
5) Assemble Tool holder and Rings to Barrel complete. (**Fig. 23**)
6) Take the reverse step of Disassembly to do the further steps.

Fig. 22

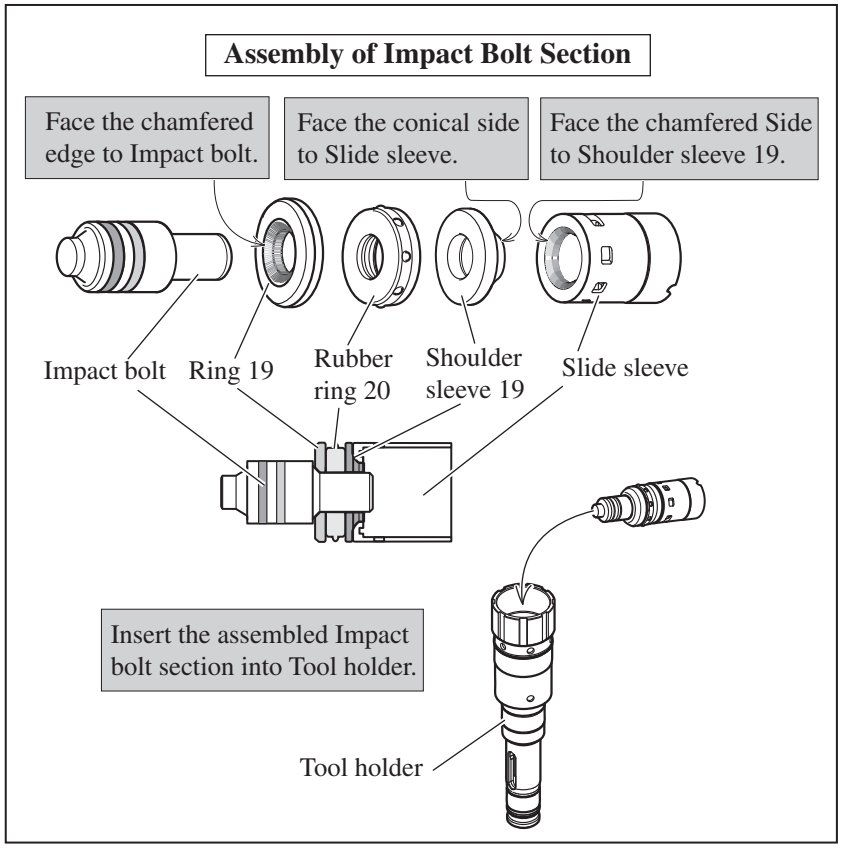

Fig. 23

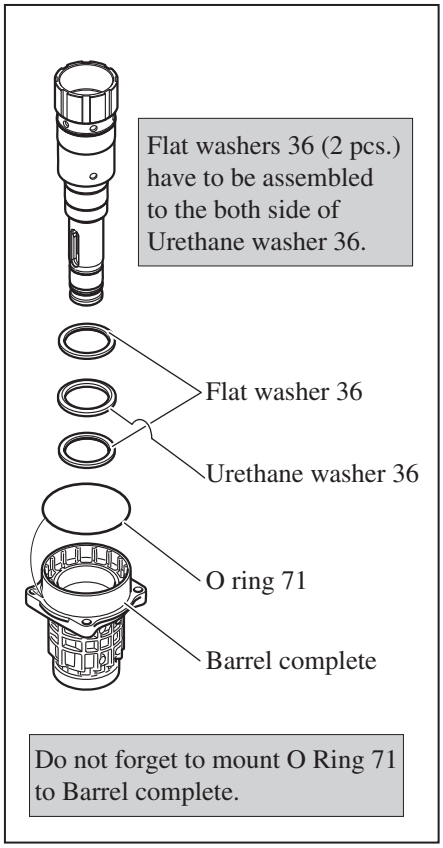

Repair

[3] DISASSEMBLY/ASSEMBLY
[3] -3. Barrel Complete

DISASSEMBLY

1) Remove Barrel complete from the machine as illustrated in **Figs. 13, 14 and 15**.
2) Remove Ring spring 50 and Oil seal 35 as illustrated in **Figs. 24 and 25**.

Fig . 24

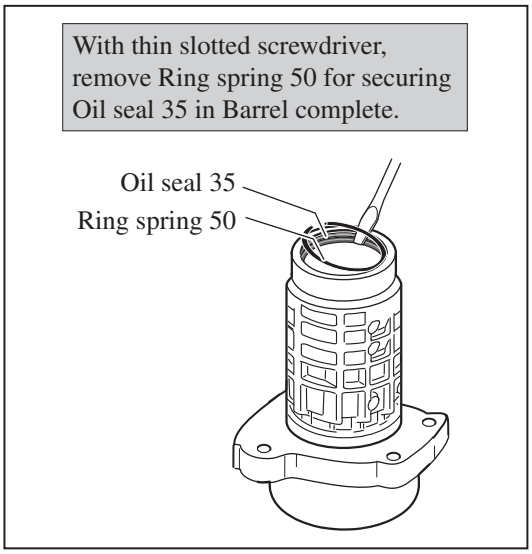

Fig. 25

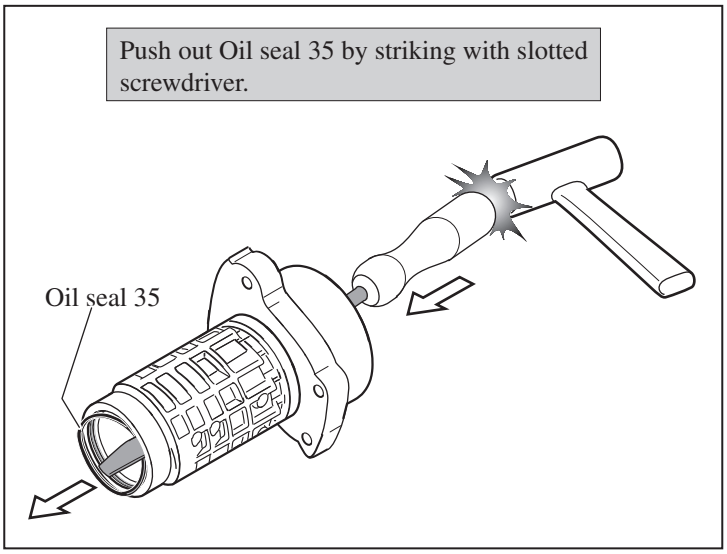

ASSEMBLY

1) Fit Oil seal 35 into Barrel complete. Refer to **Fig. 26**.
2) Secure Oil seal with Ring spring 50. Refer to **Fig. 24**.

Fig. 26

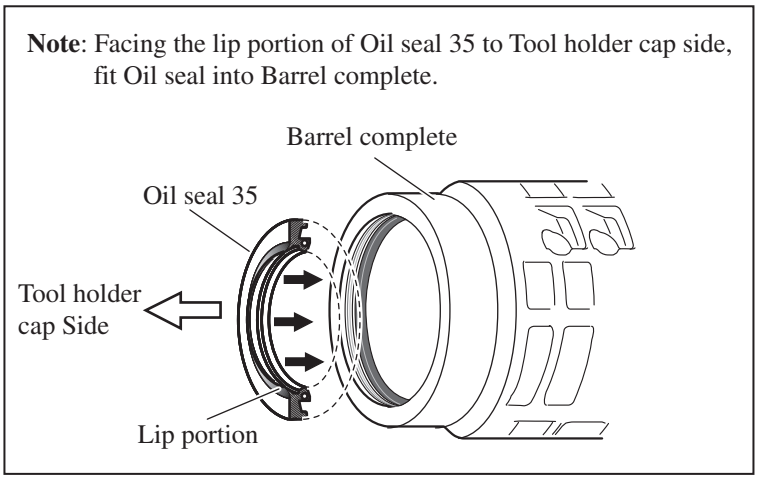

Repair

[3] DISASSEMBLY/ASSEMBLY
[3] -4. Active Dynamic Vibration Absorber (HR4510C and HR4511C only)

DISASSEMBLY

1) Disassemble Chuck section. (**Figs. 4 to 11**) and remove Barrel cover complete and Barrel section. **(Figs. 13 and 14)**
2) Disassemble Active dynamic vibration absorber in the order of **Figs. 27 to 30**.

Fig. 27

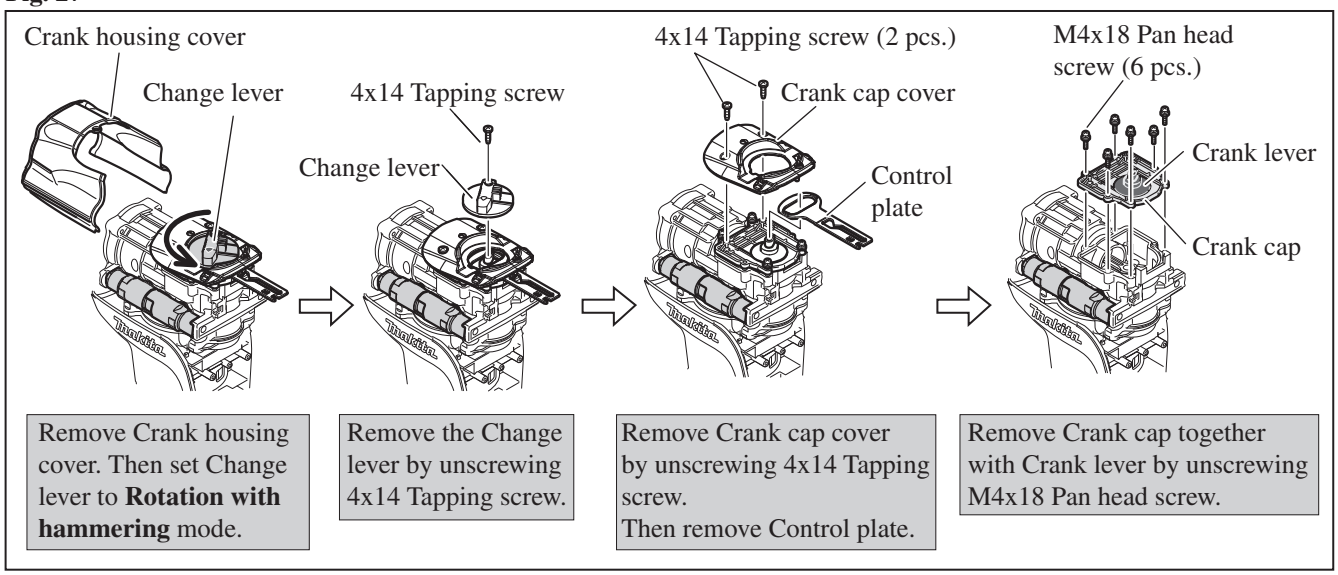

Fig. 28

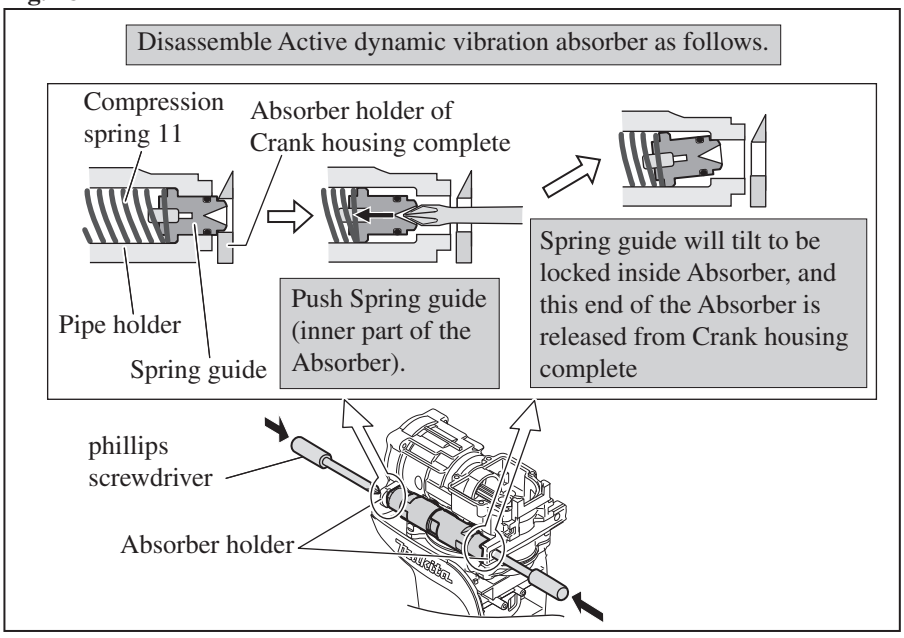

Fig. 29

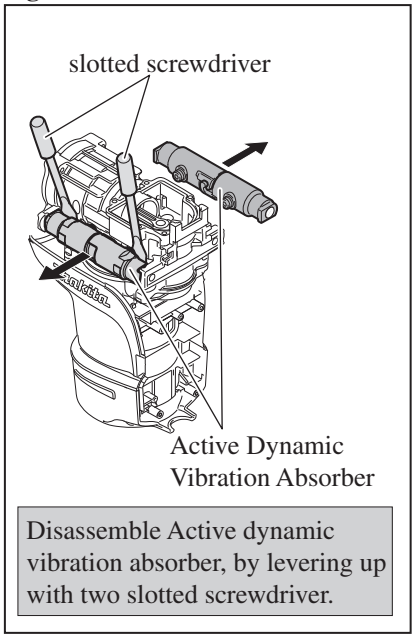

Fig. 30

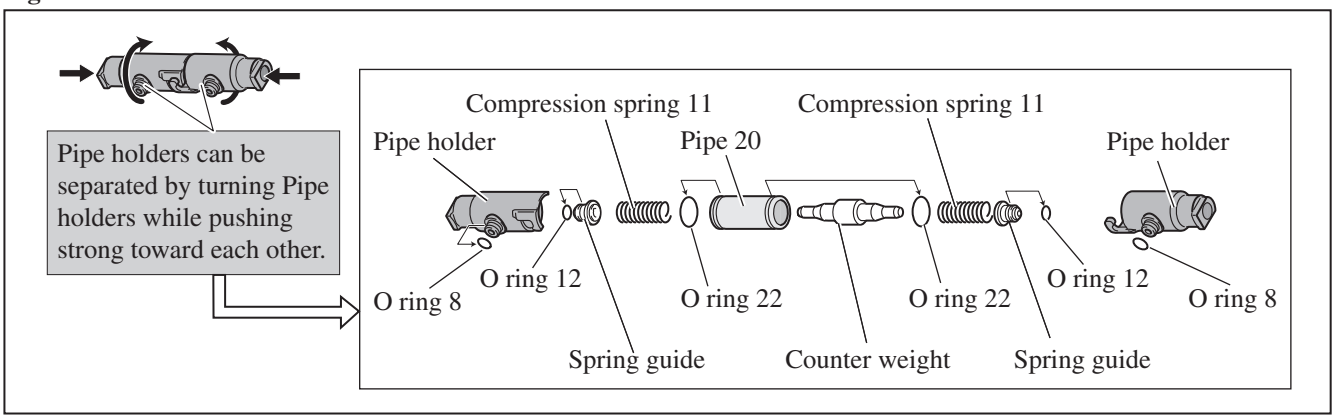

Repair

[3] DISASSEMBLY/ASSEMBLY

[3] -4. Active Dynamic Vibration Absorber (HR4510C and HR4511C only)

ASSEMBLY

1) Assemble Active dynamic vibration absorber. (**Fig. 30**)
2) Set Spring guide in place as illustrated in **Fig. 31**.
3) Mount Active dynamic vibration absorber on the both side of Crank housing complete. (**Fig. 32**)
4) Do the reverse step of disassembly in **Fig. 27**.

Fig. 31

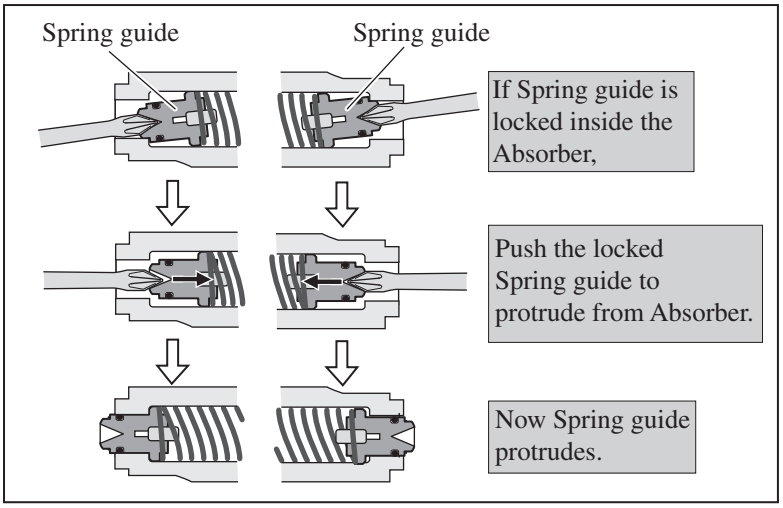

Fig. 32

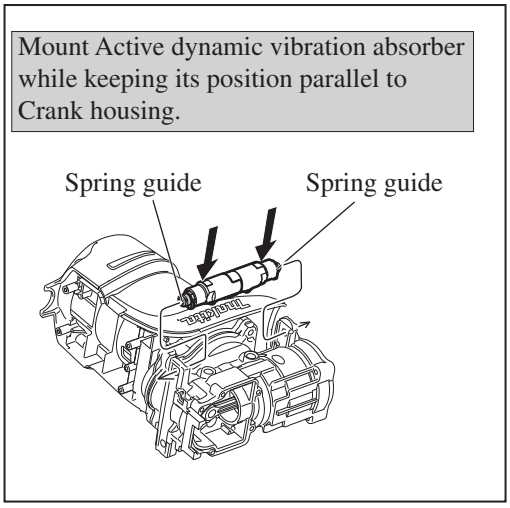

[3] -5. Crank Cap Section

DISASSEMBLY

1) Remove Crank cap section as illustrated in **Fig. 27**.
2) Disassemble Crank cap section as illustrated in **Figs. 33 and 34**.

Fig. 33

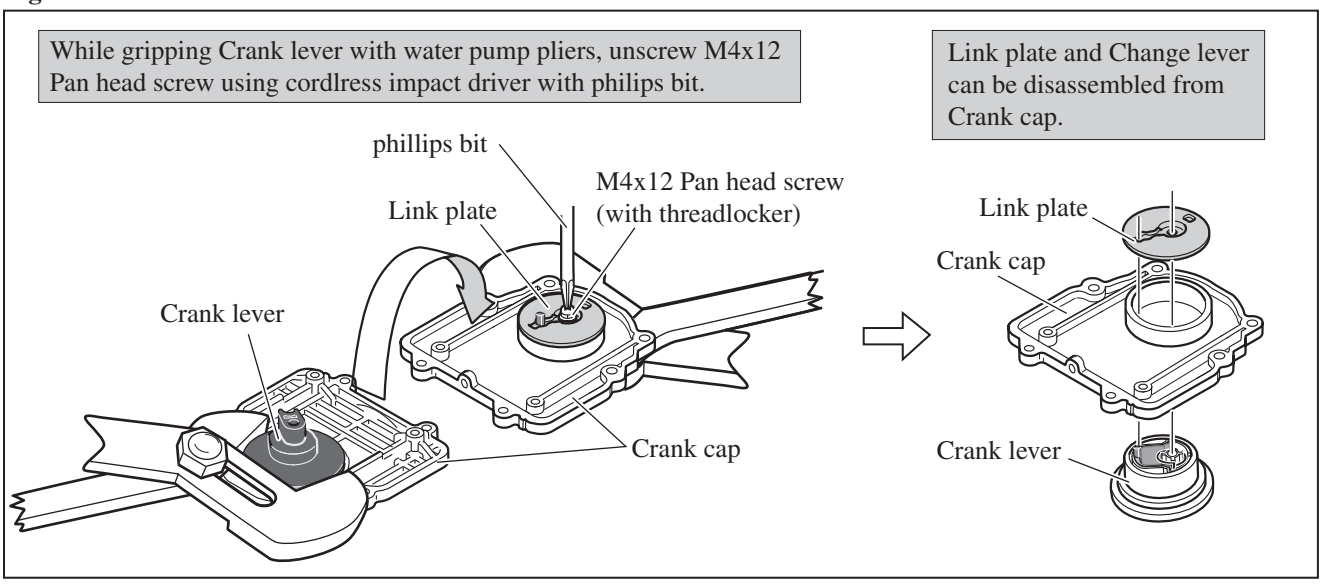

Fig. 34

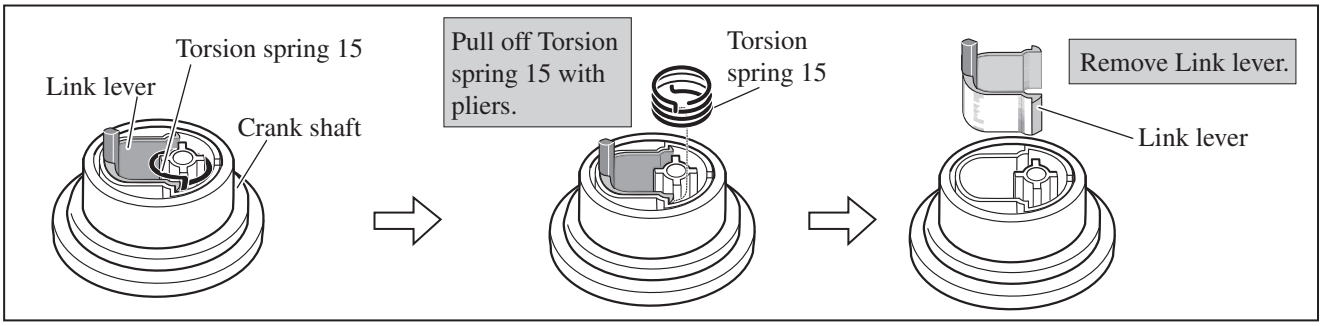

Repair

[3] DISASSEMBLY/ASSEMBLY

[3] -5. Crank Cap Section

ASSEMBLY

1) Assemble Link lever and Torsion spring 15 to Crank lever. **(Fig. 35)**

Fig. 35

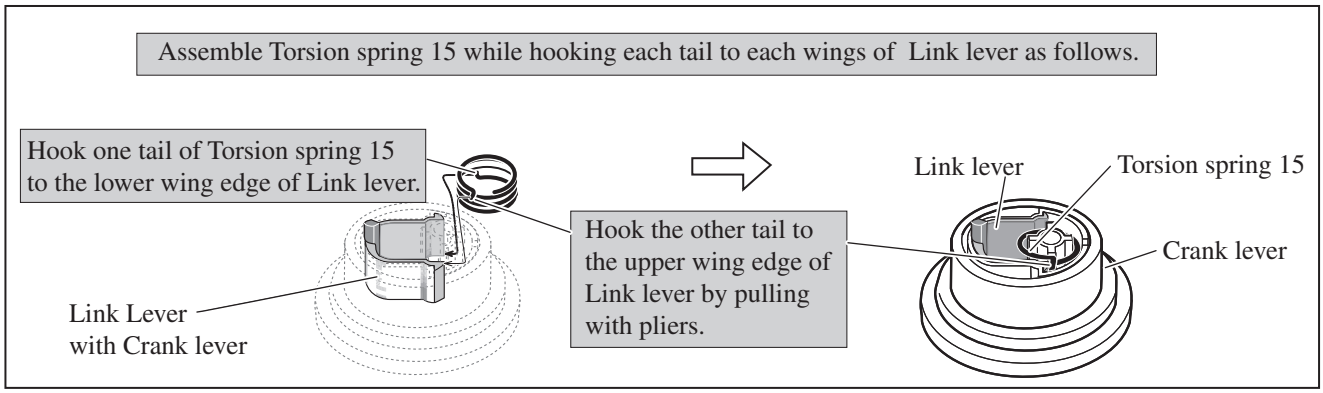

2) Assemble Link plate to the Crank lever with M4x12 Pan head screw. Refer to **Fig. 33**.
Note: Apply adhesive (ThreeBond 1342 or Loctite 242) to the thread of M4x12 Pan head screw.

3) Slide Link plate fully to Handle installation side by hand so that Link lever's Pin portion can be moved within the frame of Link plate after assembling Crank cap. (**Fig. 36**)

Fig. 36

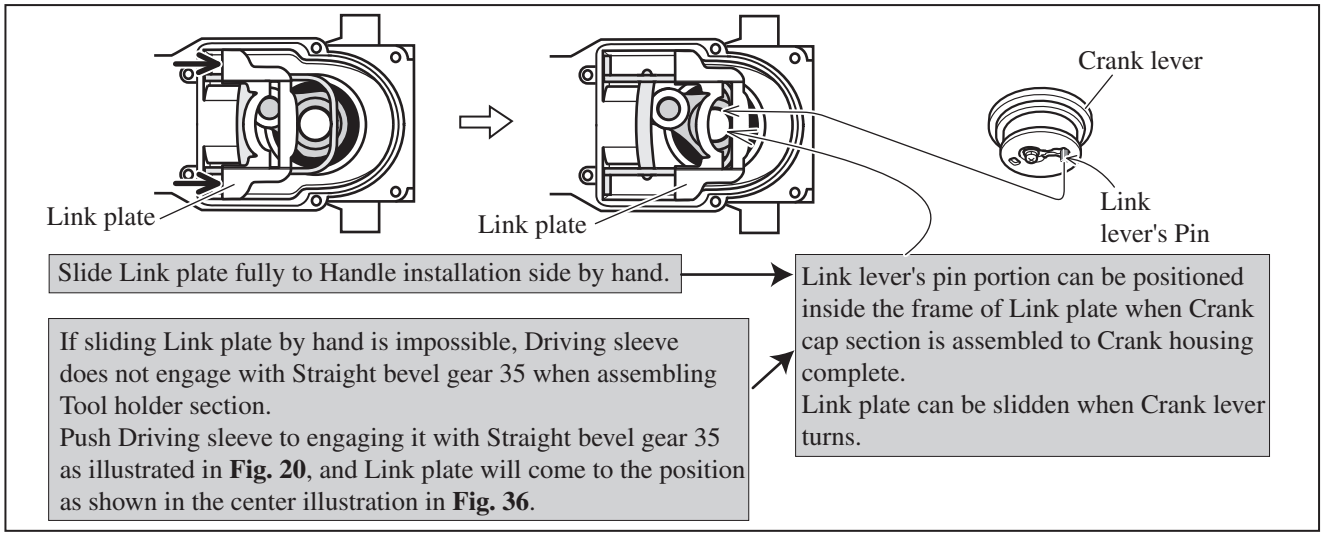

4) Mode change mechanism has to be assembled in Rotation with hammering mode as illustrated in **Fig. 37,** and **Fig. 38 (for HR4511C) / 38A (for HR4501C and HR4510C)** in the next page.

Fig. 37

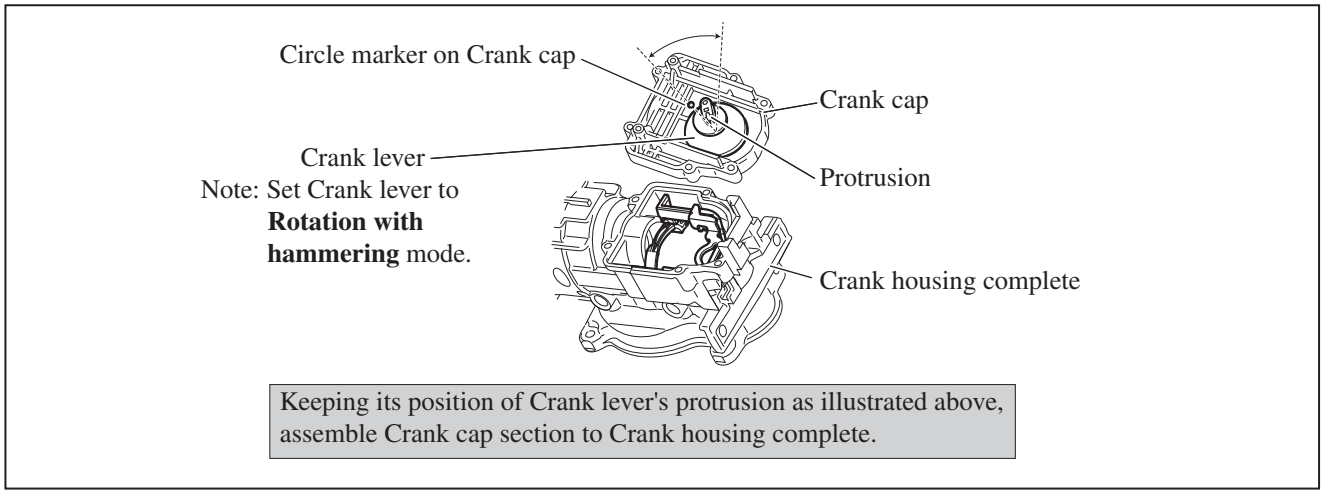

Repair

[3] DISASSEMBLY/ASSEMBLY

[3] -5. Crank Cap Section

ASSEMBLY

5) After assembling Spring guide, mount Crank cap section. (**Fig. 38: HR4511C only**)
5A) Assemble Control plate by fitting its elliptic Loop portion with the protrusion of Crank lever.
Then mount Crank cap cover. (**Fig. 38A: HR4501C and HR4510C only**)

Fig. 38: HR4511C only

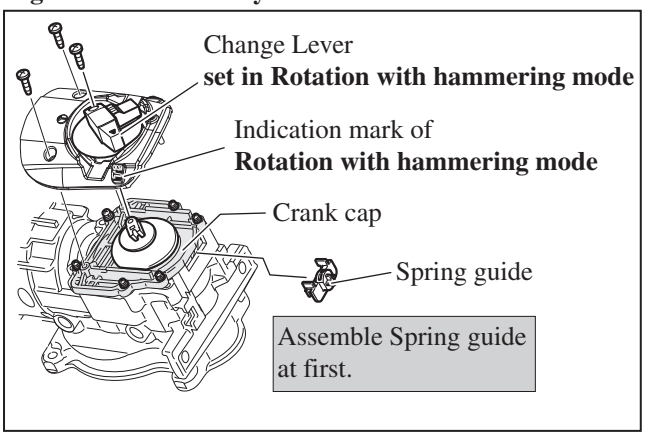

Fig. 38A: HR4501C and HR4510C only

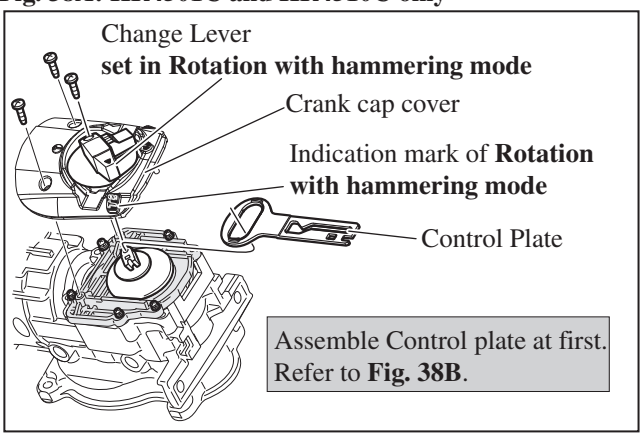

Fig. 38B: HR4501C and HR4510C only

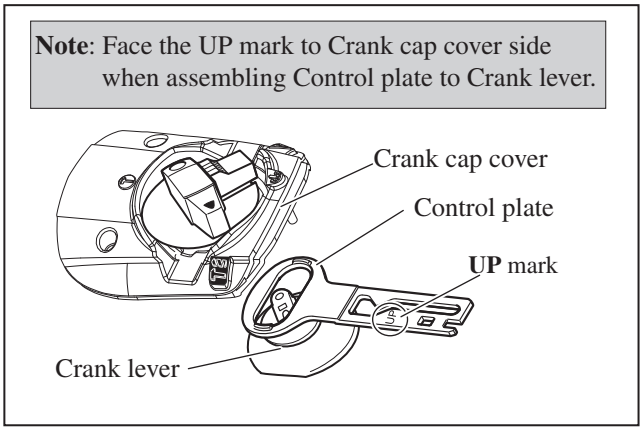

[3] -6. Crank section, Cylinder, Piston

DISASSEMBLY

1) Disassemble the Tool holder section in the order of **Figs. 13 to 18**. And disassemble Crank cap section as illustrated in **Fig. 27**.
2) Disassemble the parts in Crank housing complete before removing Cylinder as illustrated in **Figs. 39**.

Fig. 39

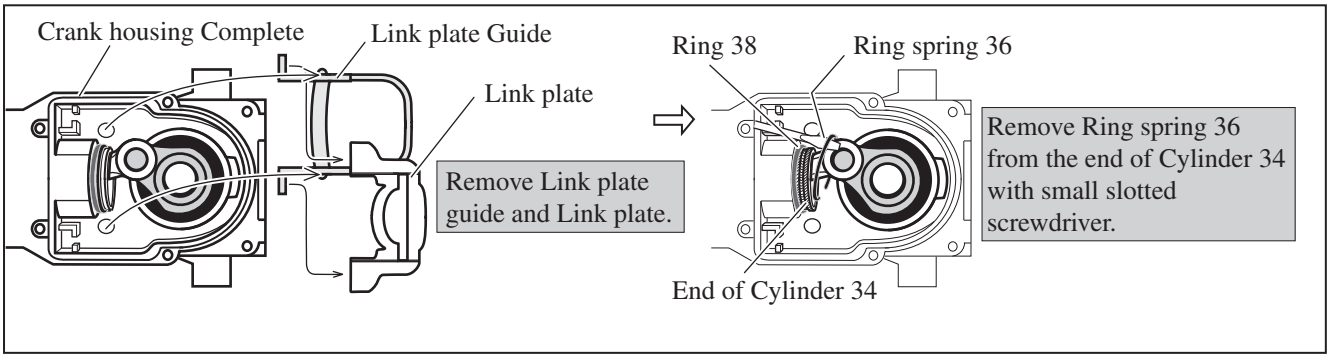

Repair

[3] DISASSEMBLY/ASSEMBLY

[3] -6. Crank section, Cylinder, Piston (cont.)

DISASSEMBLY

3) Disassemble Cylinder 34 as illustrated in **Fig. 40**.

Fig. 40

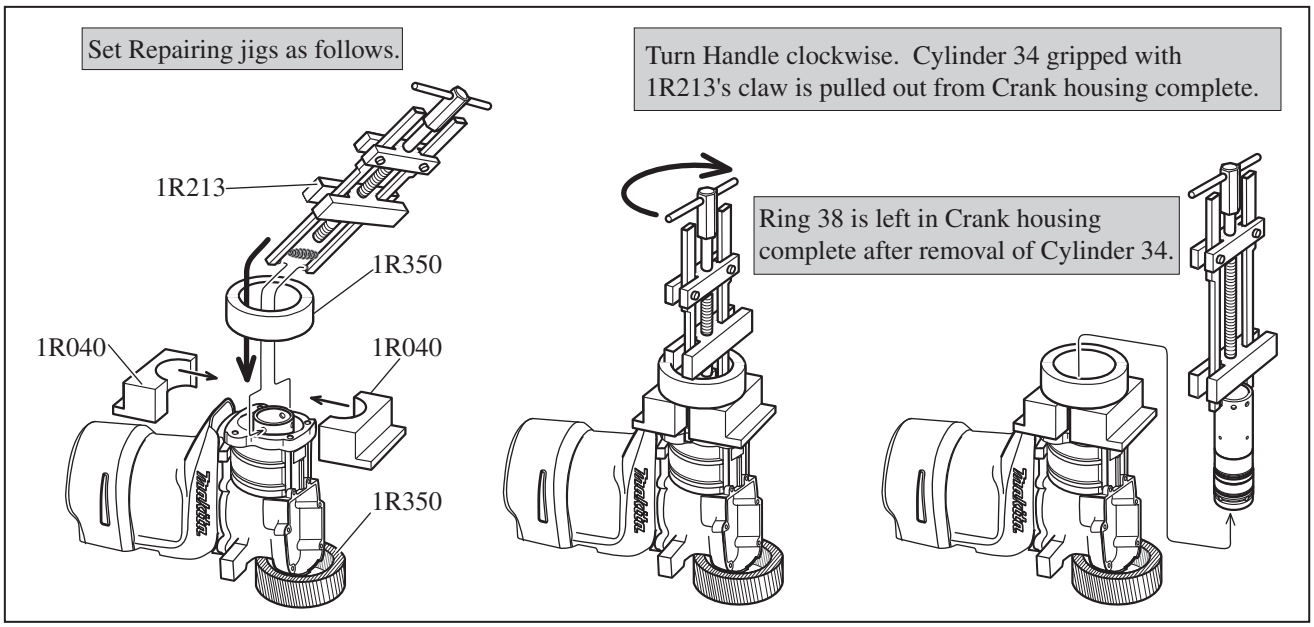

3A) Cylinder 34 can be disassembled without 1R213. Refer to **Fig. 40A**.

Fig. 40A

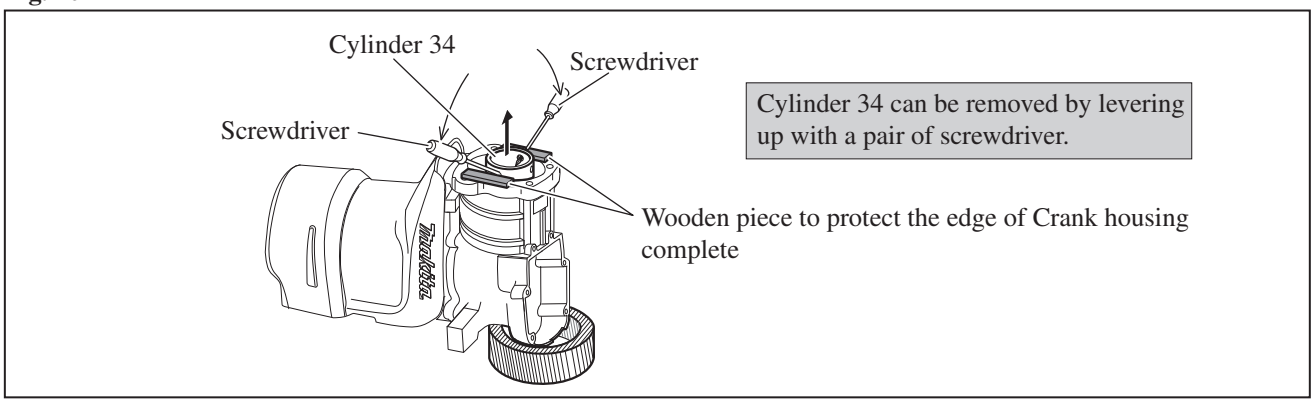

4) Disassemble Piston in the order of **Figs. 41 to 43**.

Fig. 41

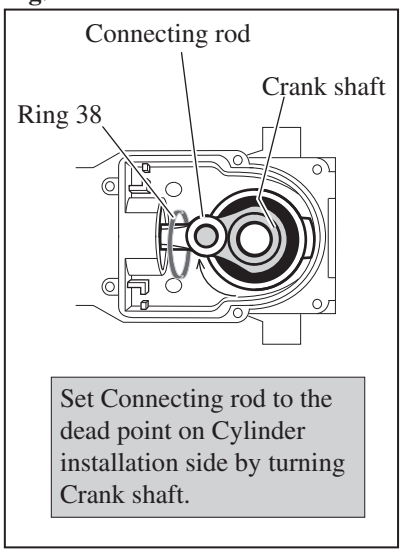

Fig. 42

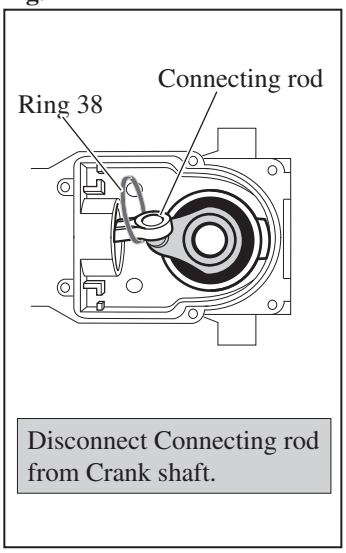

Fig. 43

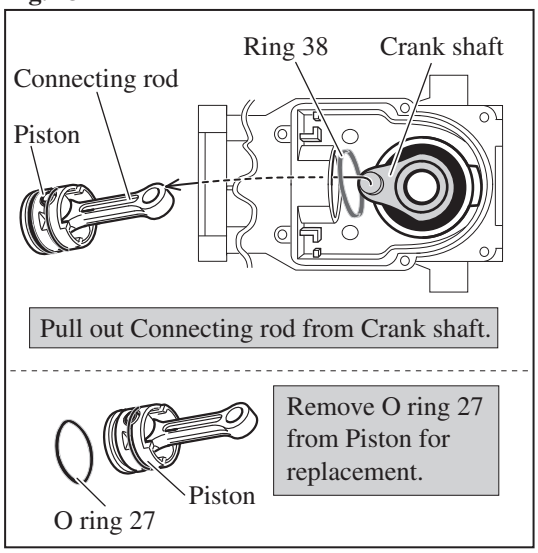

Repair

[3] DISASSEMBLY/ASSEMBLY

[3] -6. Crank section, Cylinder, Piston

ASSEMBLY

1) Passing Connecting rod through Ring 38, connect Connecting rod to Crank shaft. **Refer to Fig. 43**.
2) Mount Ring spring 37 and O ring 35 (2 pcs.) on Cylinder 34 before assembling Cylinder 34 to Crank housing complete. (**Fig. 44**)
3) Mount Ring 38 and Ring spring 36 to the Cylinder end which protrudes into Crank room. Refer to **Fig. 39 (right)**.
4) Regarding HR4510C and HR4511C, Seal plates have to be assembled to the position illustrated in **Fig. 45**.
5) Do the reverse step of disassembling.

Fig. 44

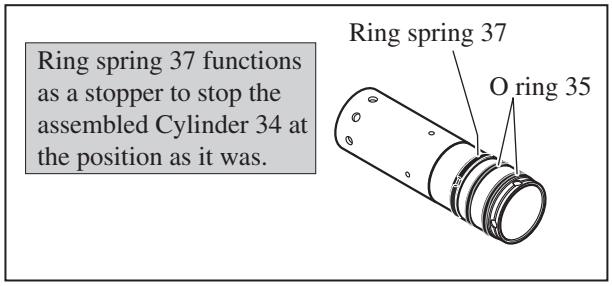

Fig. 45 (HR4510C and HR4511C only)

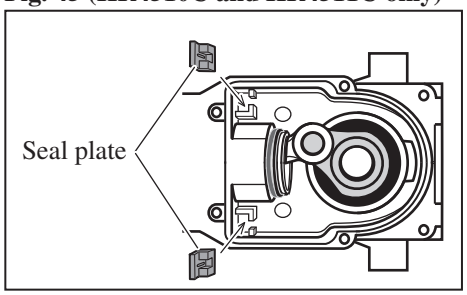

[3] -7. Switches, Controller, Power Supply Cord

DISASSEMBLY

1) Main switch and Slide switch (for HR4501C and HR4510C only) can be disassembled as illustrated in **Figs. 46 and 47.**

Fig. 46

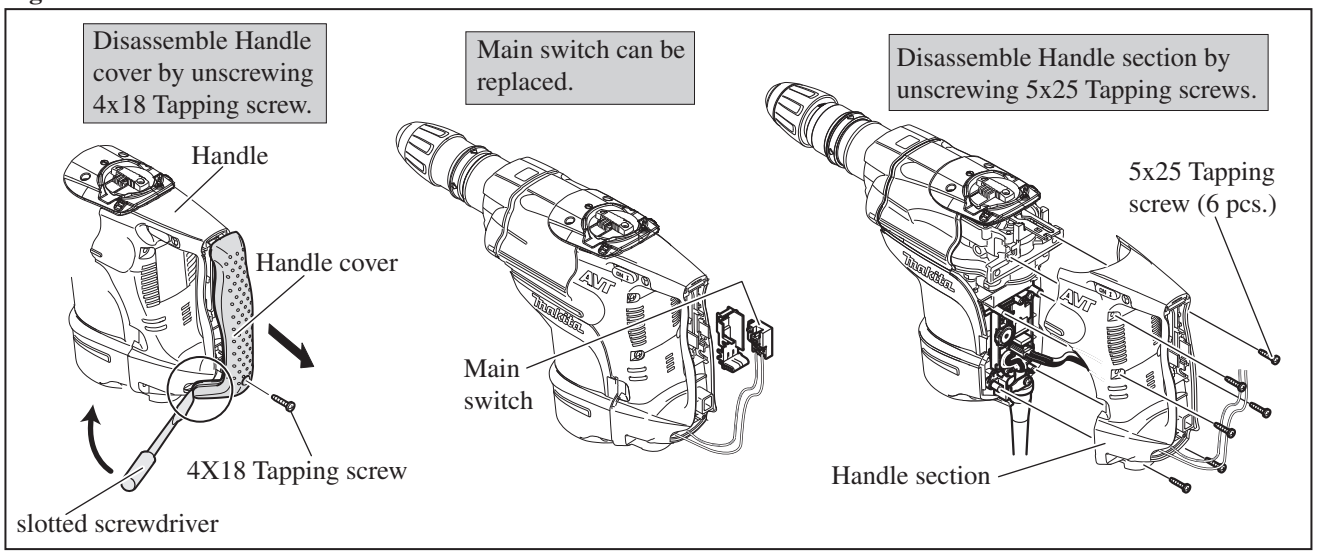

Fig. 47 (HR4510C and HR4511C only)

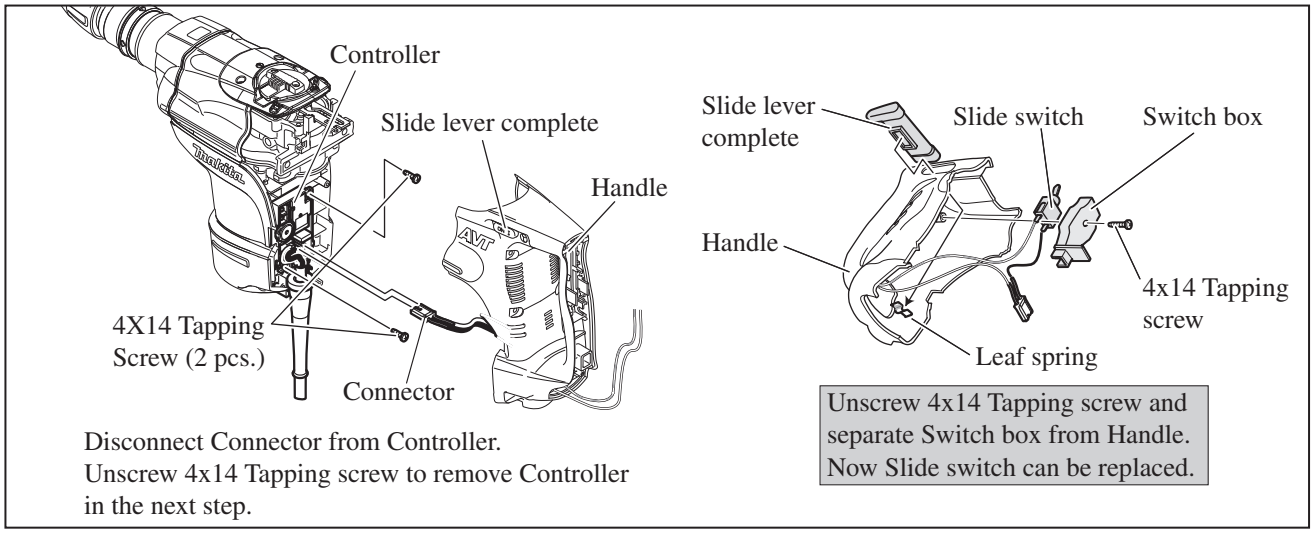

Repair

[3] DISASSEMBLY/ASSEMBLY

[3] -7. Switches, Controller, Power Supply Cord (cont.)

3) Controller and Power supply cord can be disassembled as illustrated in **Figs. 48 and 49.**

Fig. 48

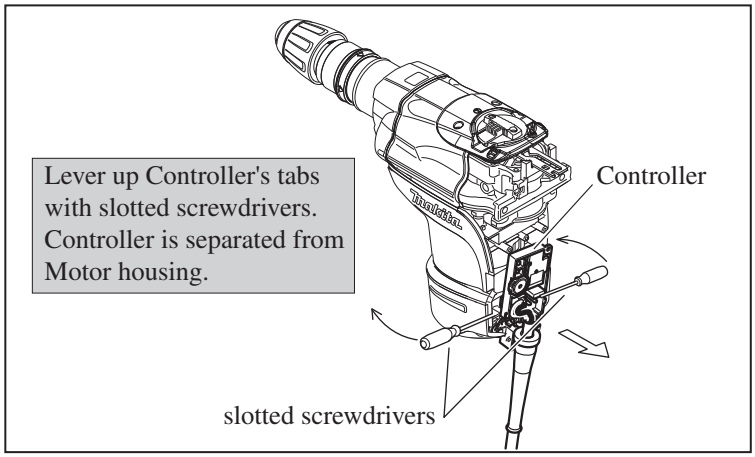

Fig. 49

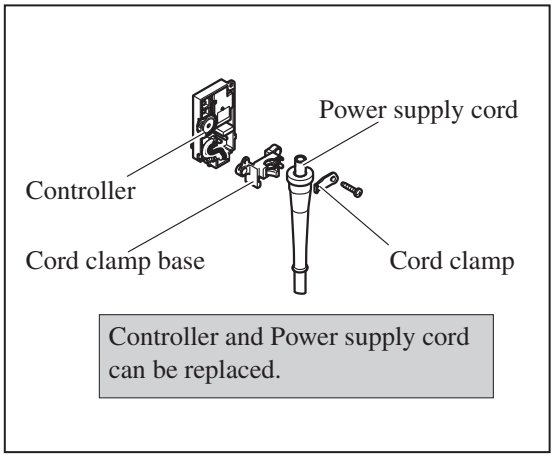

ASSEMBLY

Do the reverse step of Disassembling. Refer to **Figs. 49 to 46**.

[3] -8. Motor Section

DISASSEMBLY

1) Disassemble Chuck section. (**Figs. 4 to 11**) and remove Barrel cover complete and Barrel section. **(Figs. 13 and 14)**
2) Disassemble Handle section and Controller from the machine as illustrated in **Figs. 46 to 48**.
3) Disassemble the rear side of Motor housing in the order of **Figs. 50 to 52**.

Fig. 50

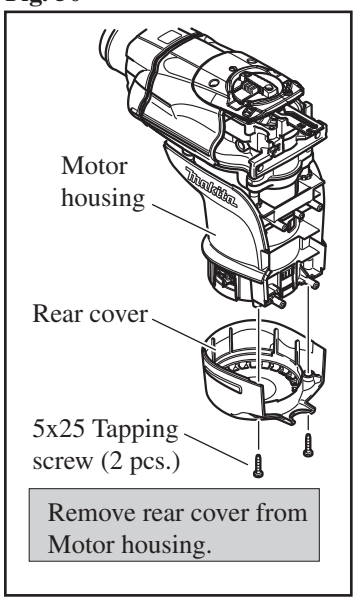

Fig. 51

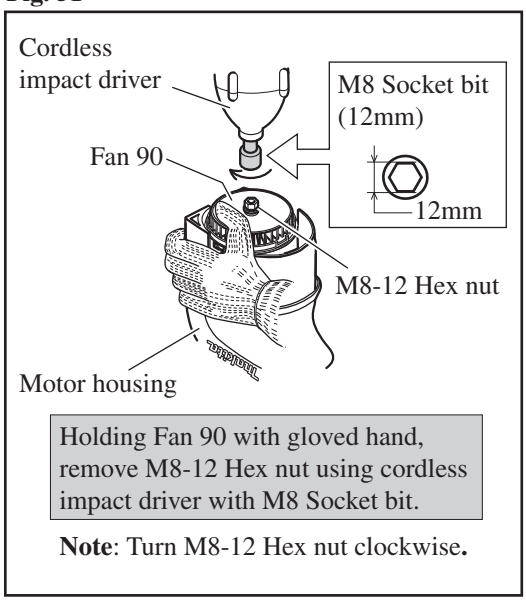

Fig. 52

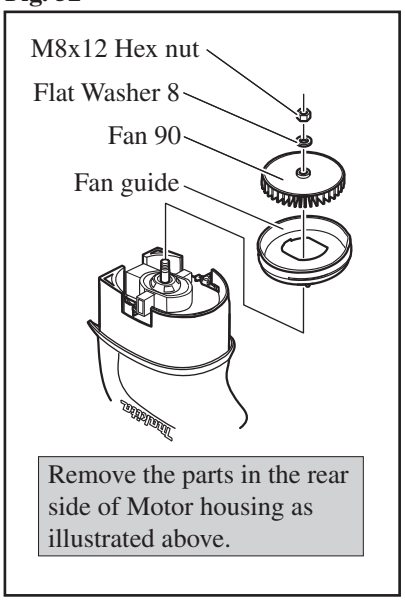

Repair

[3] -8. Motor Section (cont.)

DISASSEMBLY

4) Disconnect Carbon brush from Armature's commutator. (**Figs. 53**)
5) Regarding HR4510C and HR4511C, remove Active Dynamic Vibration Absorber before separating Motor housing from Crank housing complete. (**Fig. 54**) Armature can be disassembled as illustrated in **Fig. 55**.

Fig. 53

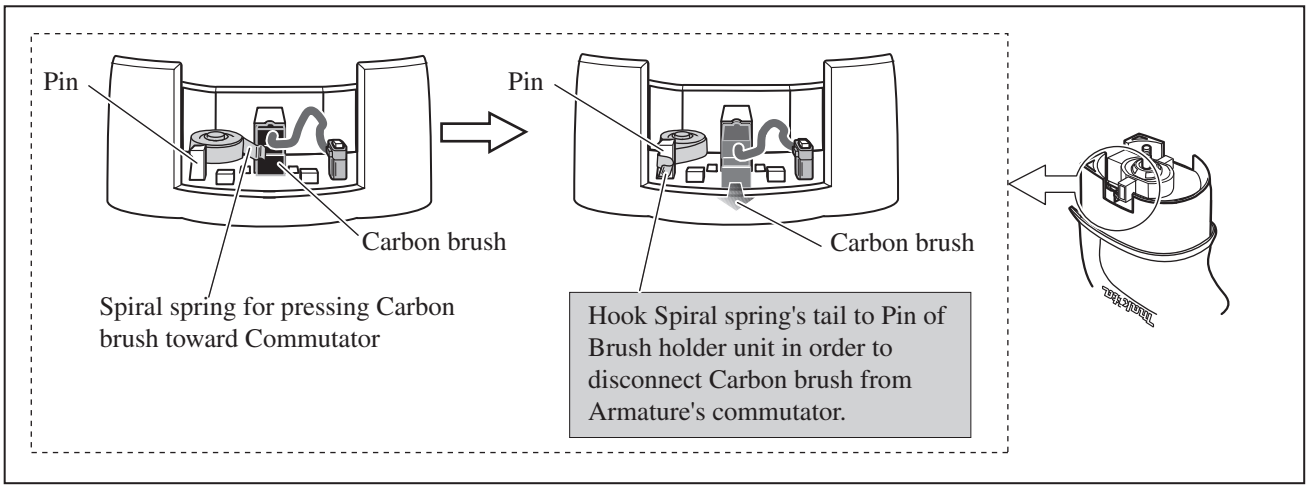

Fig. 54 (HR4510C and HR4511C only)

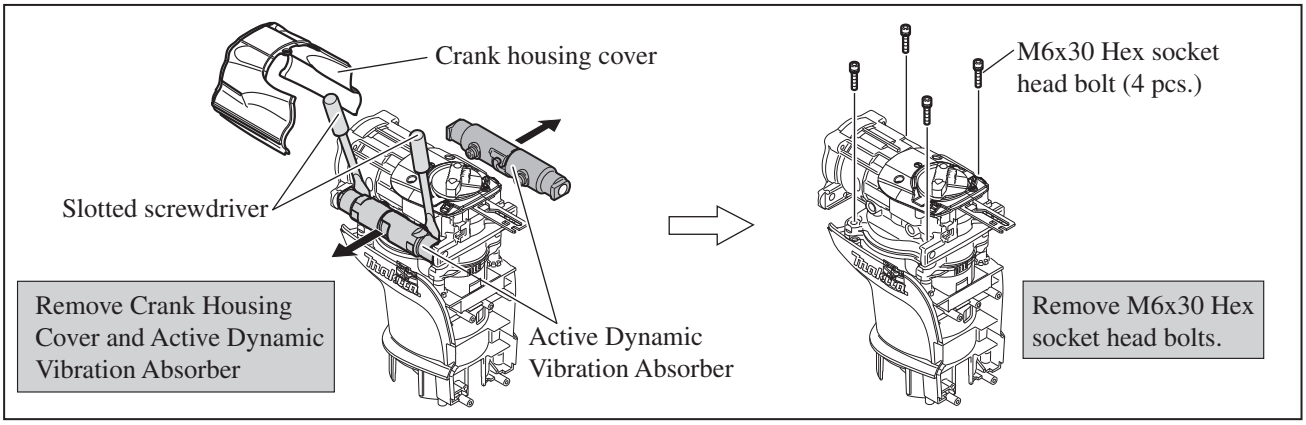

6) Armature can be disassembled **as illustrated in Fig. 55**.

Fig. 55

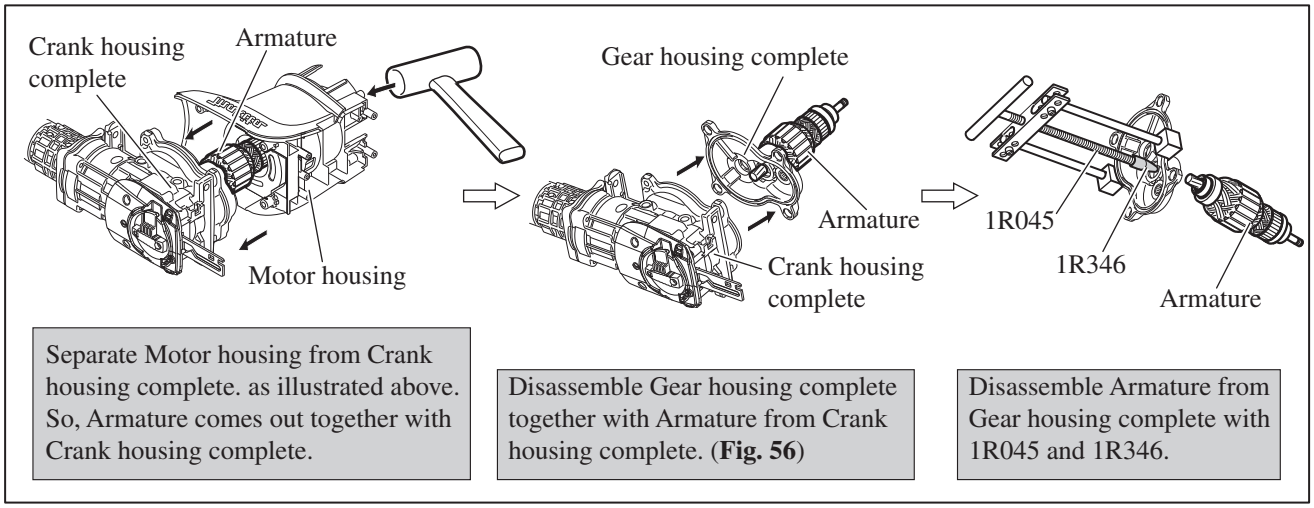

ASSEMBLY

Do the reverse step of Disassembly.

Repair

[3] DISASSEMBLY/ASSEMBLY

[3] -9. Gear Section

DISASSEMBLY

1) Disassemble the following parts from Crank housing complete.
   * Chuck section (**Figs. 4 to 11**) * Barrel section (**Figs. 13 and 14**) * Handle section and Controller (**Figs. 46 to 48**)
   * Motor section (**Figs. 50 to 55**)
   After removing the above parts, Gears and Crank shaft are left in Crank housing complete.
2) Disassemble Gears and Crank shaft from Crank housing complete as illustrated in **Figs. 56 and 57**.

Fig. 56

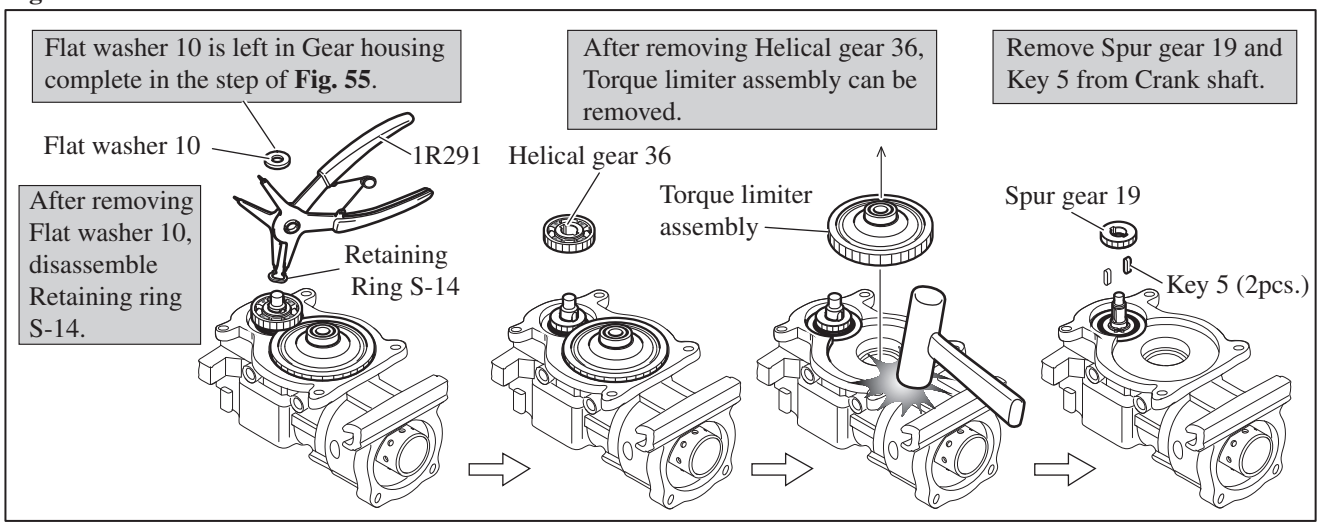

Fig. 57

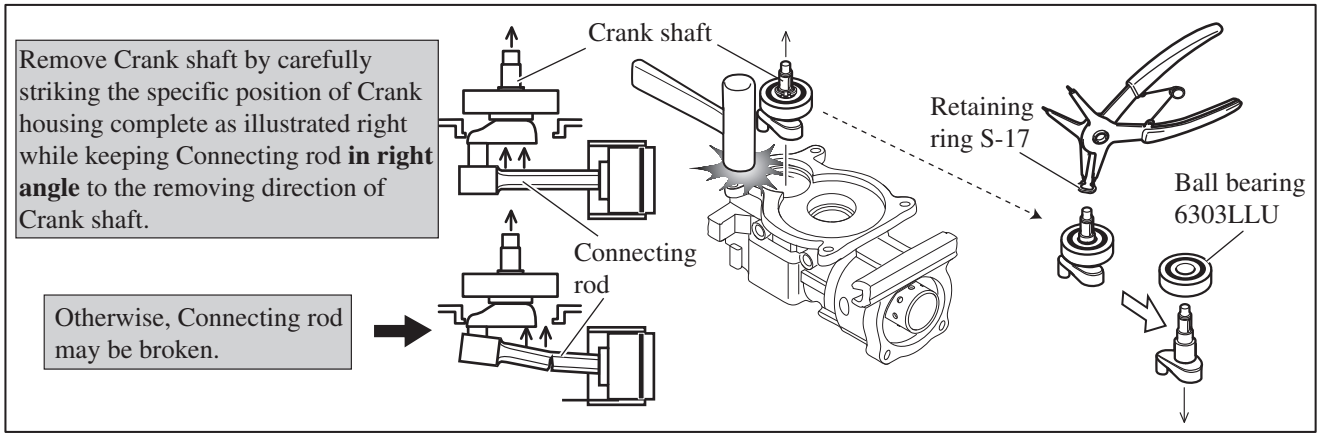

ASSEMBLY

Do the reverse step of Disassembly illustrated in **Figs. 56 and 57**. Refer to **Fig. 58** when assembling Gear section.

Fig. 58

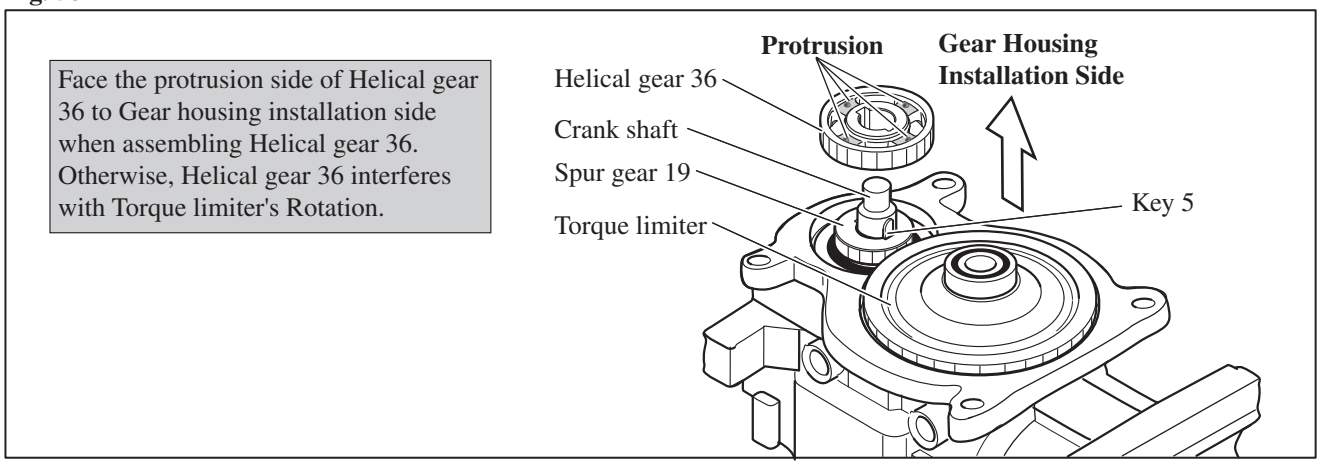

Repair

[3] DISASSEMBLY/ASSEMBLY

[3] -10. Handle Section (HR4511C: with Vibration absorbing handle)

DISASSEMBLY

1) Vibration absorbing handle consists of the following main parts.
   * Handle base
   * Compression spring 11 (functions as a Vibration absorber)
   * Dust cover and Dust cover support
   * Handle with Handle cover
2) Disassemble in the order from **Figs. 59 to Fig. 61** when replacing the electrical parts in Handle section.

Fig. 59

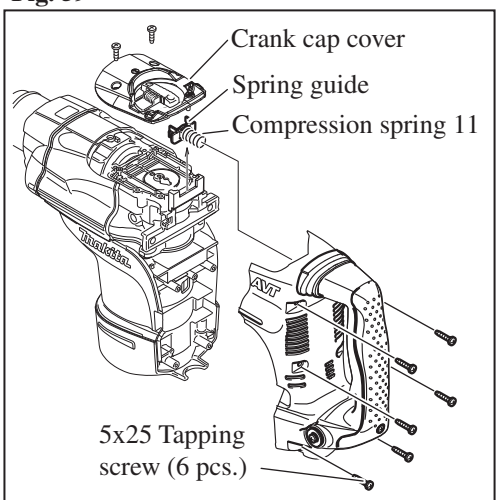

Separate Handle section from the machine by unscrewing 5x25 Tapping screws.

After removing Crank cap cover, Spring guide with Compression spring 11 can be removed from Crank housing complete.

Fig. 60

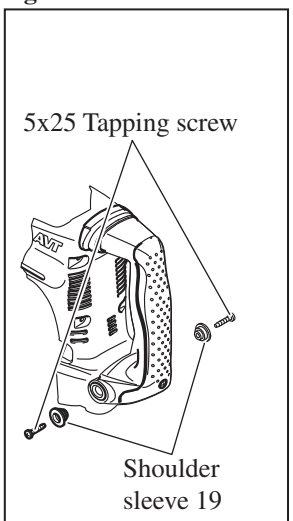

Remove another two 5x25 Tapping screws to disassemble Handle in the next step.

Fig. 61

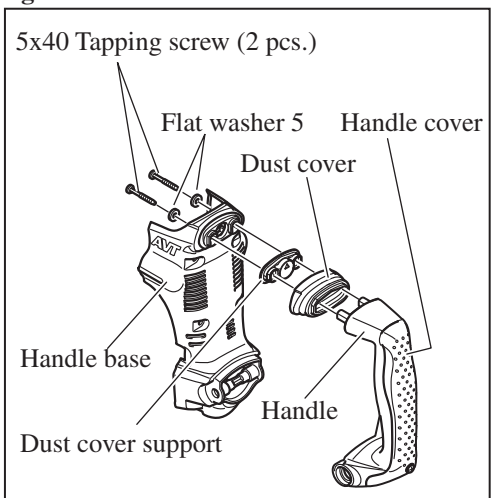

Remove 5x40 Tapping screws.
The several parts are separated from Handle base as illlutrated above.
Handle cover can be removed as the left Illustration in **Fig. 46**.

ASSEMBLY

Do the reverse step of Disassembly. Refer to **Figs. 60 to 58**.
Refer to **Fig. 62** when assembling Dust cover and Dust cover support to Handle.

Fig. 62

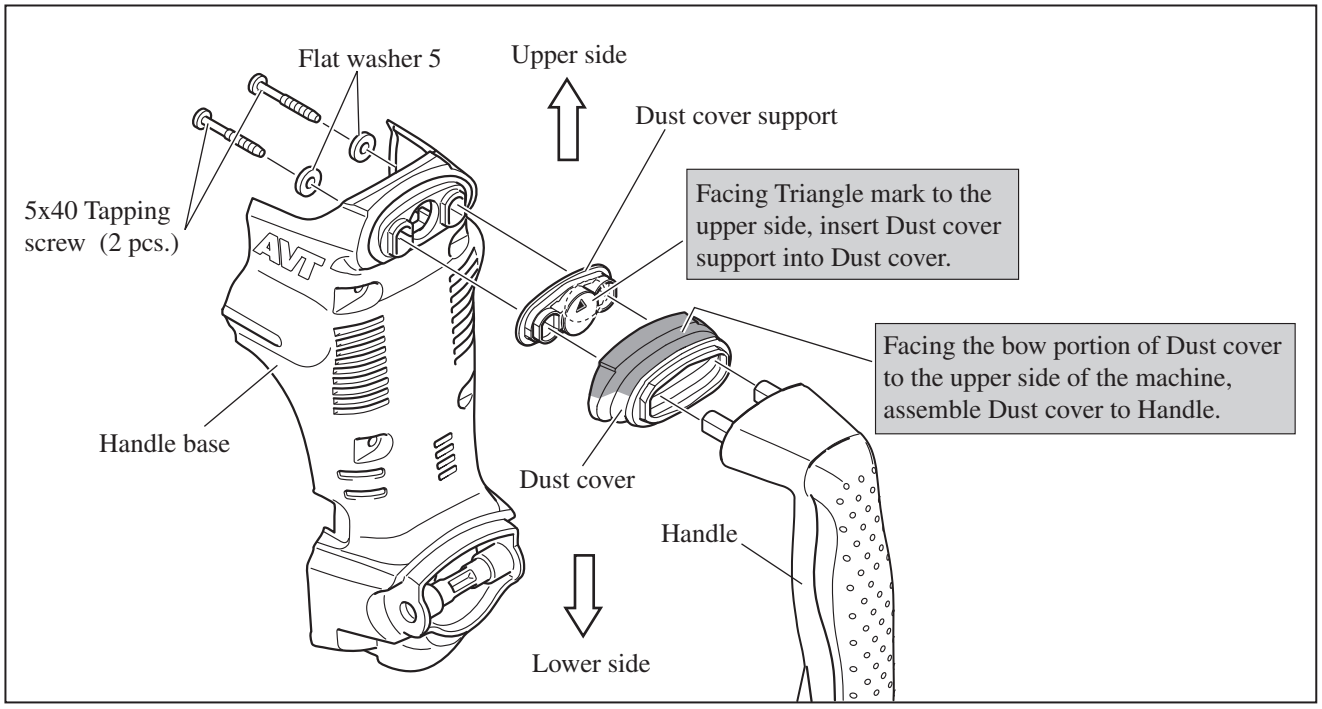

Repair

[3] DISASSEMBLY/ASSEMBLY

[3] -11. Fastening Torque

Fasten the bolts to the fastening torque listed in **Fig. 63**.
Note: Apply adhesive (ThreeBond 1342 or Loctite 242) to the thread of M4x12 Pan head screw (Item No. 78).

Fig. 63

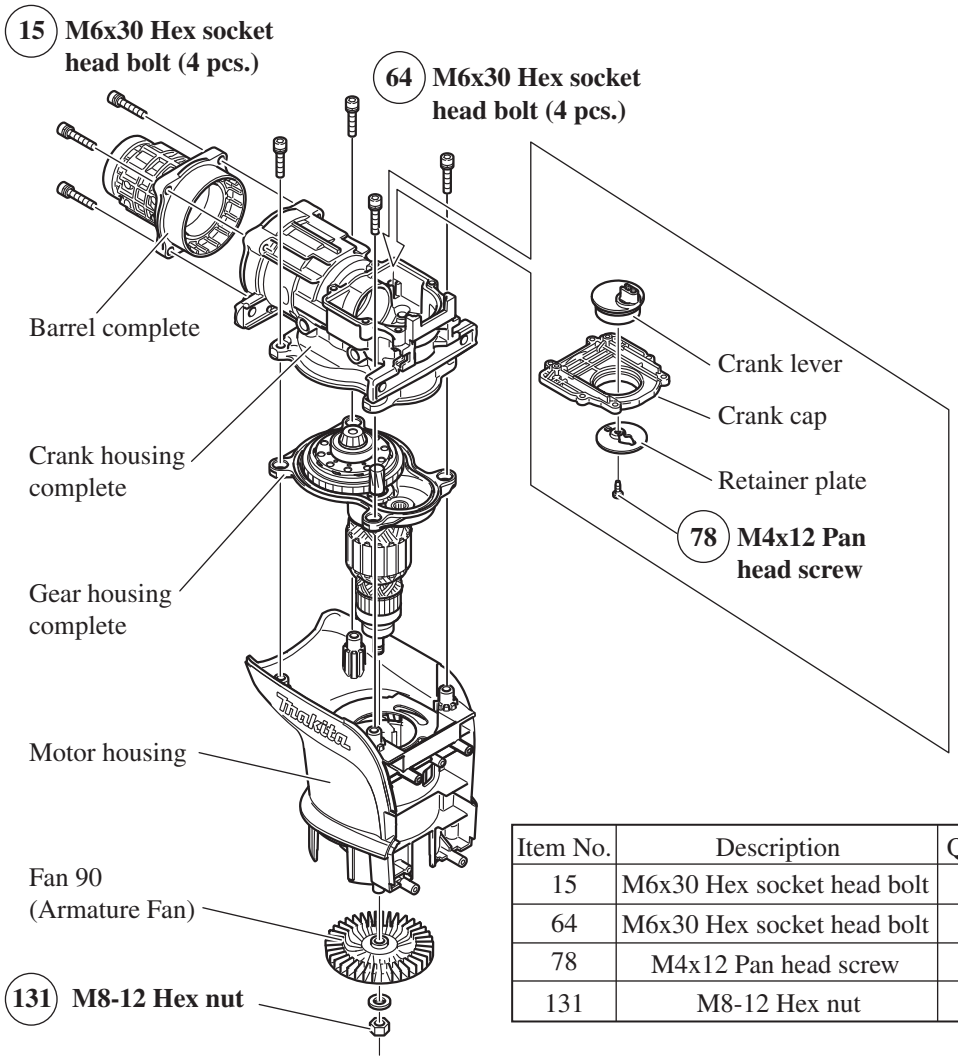

Item No.	Description	Q'ty	Fastening torque
15	M6x30 Hex socket head bolt	4	**7.8 - 11.7 N.m**
64	M6x30 Hex socket head bolt	4	**4.9 - 7.8 N.m**
78	M4x12 Pan head screw	1	**1.5 - 2.3 N.m**
131	M8-12 Hex nut	1	**1.8 - 3.5 N.m**

[4] Maintenance

When replacing carbon brush, it is recommended to do replace the following parts (**Fig. 64**) and apply appropriate amount of lubricants (**Figs. 1 to 3**) at the same time for longer service life of the machine.

Fig. 64

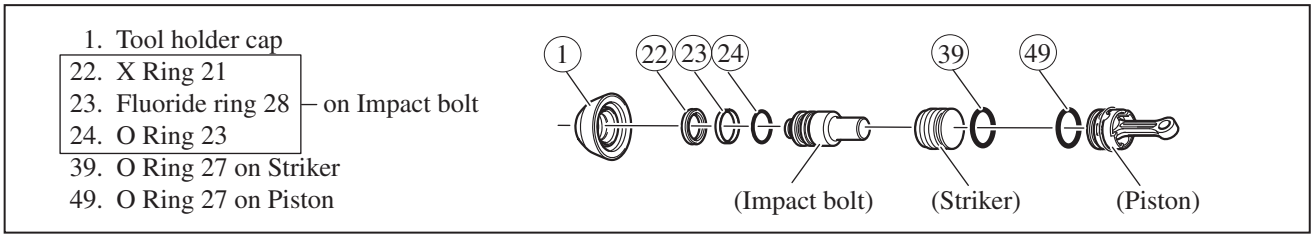

Circuit diagram

Fig. D-1 **Model HR4511C without Lock ON Switch**

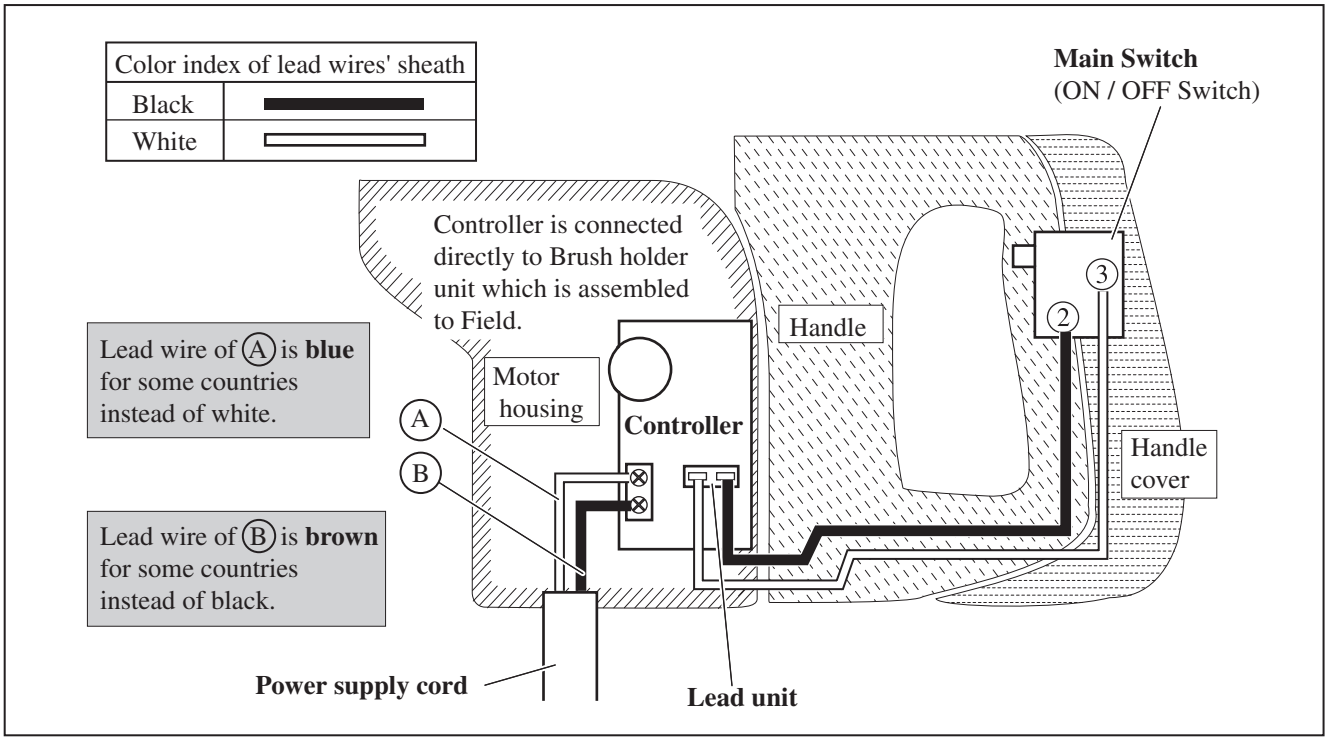

Wiring diagram

Fig. D-2 **Model HR4511C without Lock ON Switch**

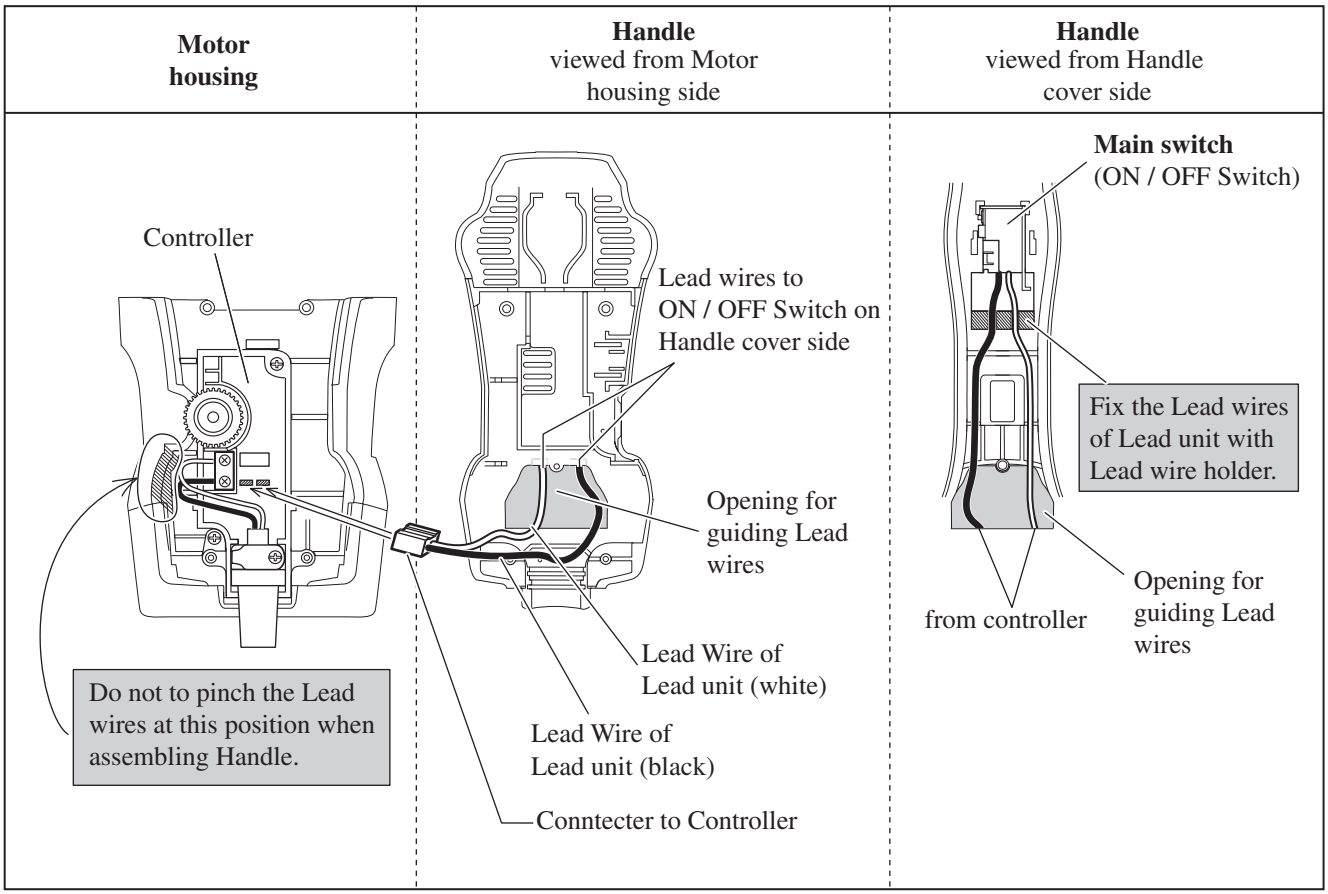

Circuit diagram

Fig. D-3 **Models HR4501C and HR4510C with Lock ON Switch**

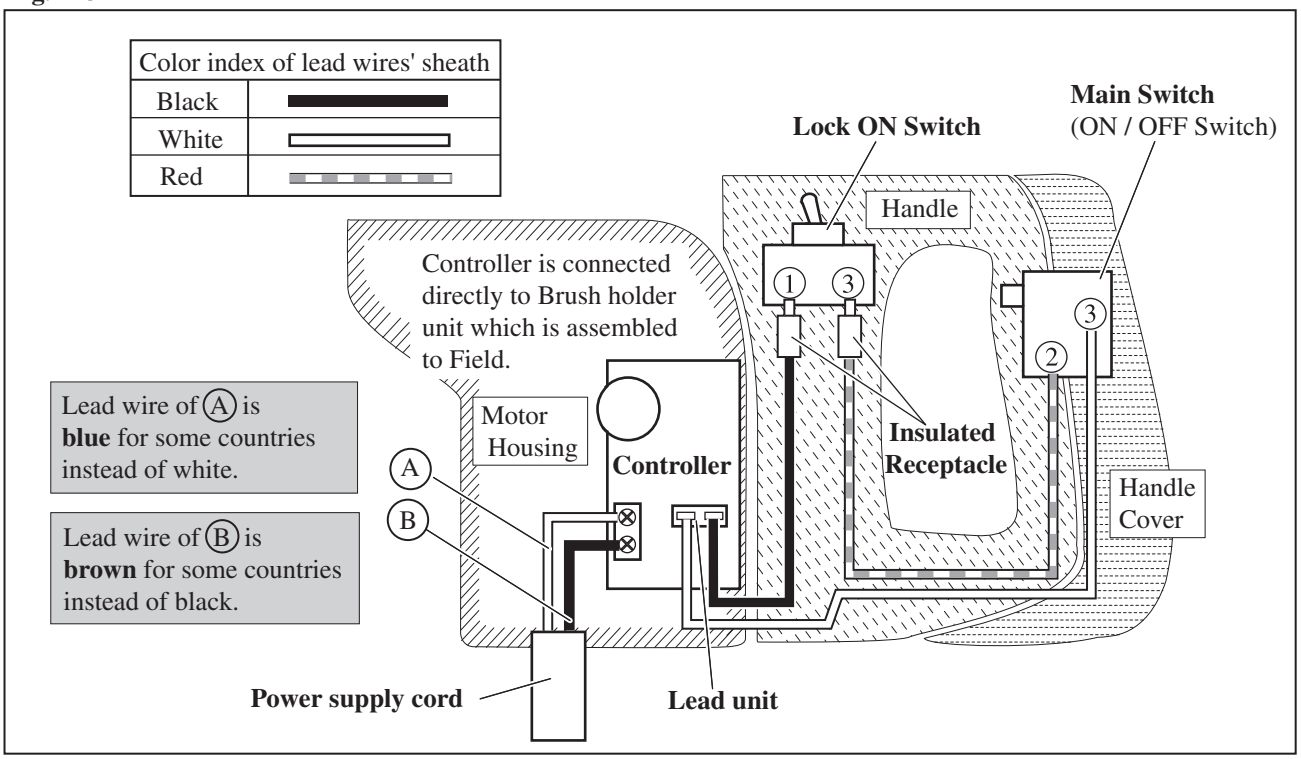

Wiring diagram

Fig. D-4 **Models HR4501C and HR4510C with Lock ON Switch**

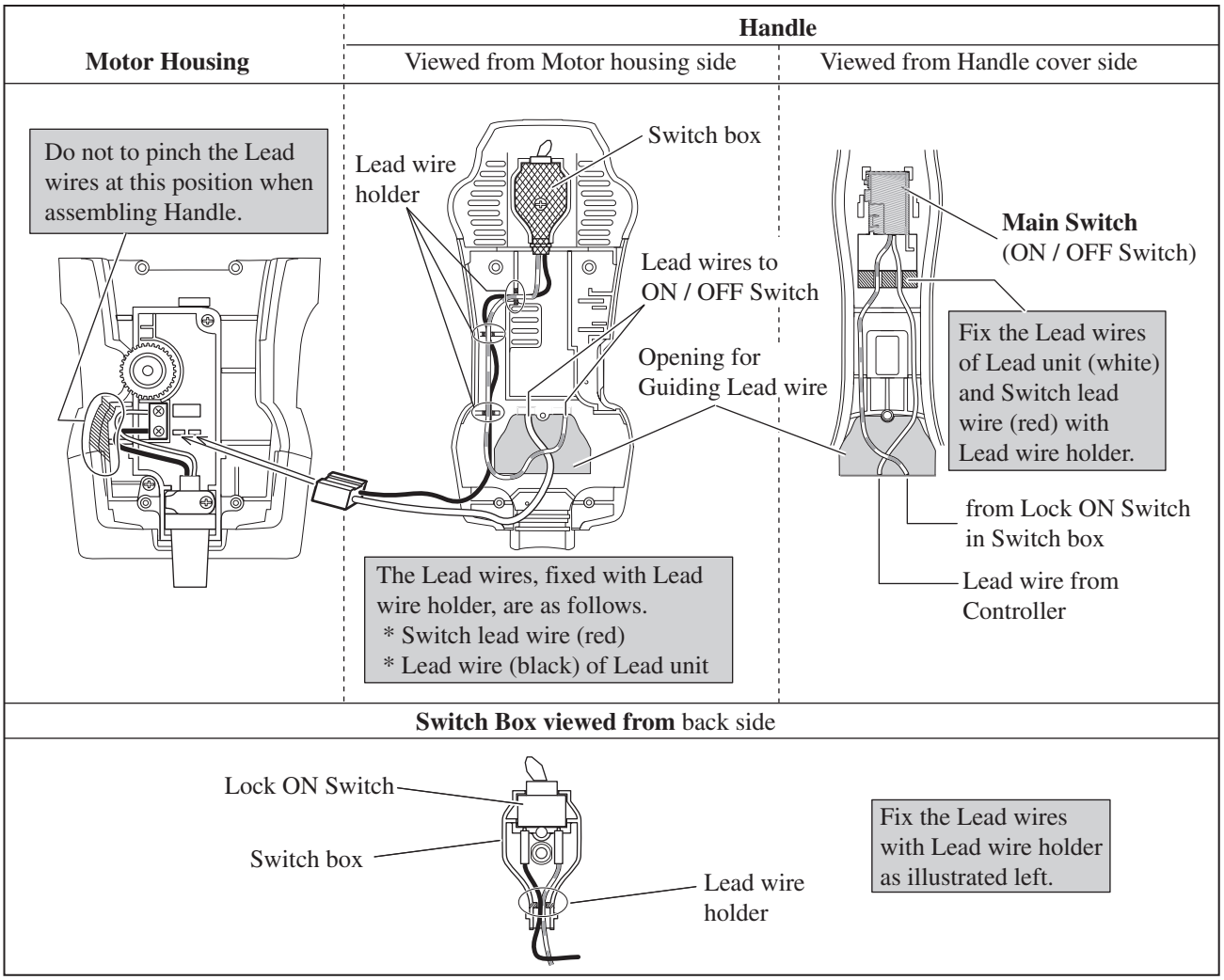

Wiring diagram

Connecting Carbon Brush

Fig. D-5