# TECHNICAL INFORMATION

New Tool

**Models No.** ► HR3850K

**Description** ► MAKITA Rotary Hammer

## CONCEPTION AND MAIN APPLICATIONS

This drill is designed exclusively for exporting, which KANGO-950 bit attaches to. The original model is HR3850.

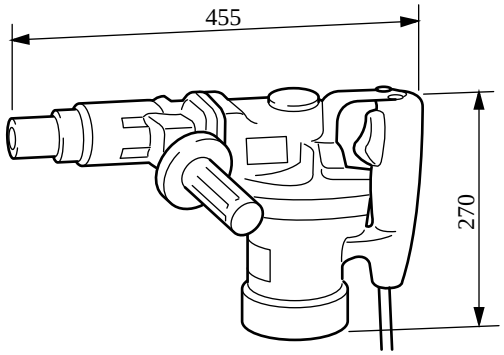


## ► Specifications

The same as HR3850

Tool size---The same as KANGO-950

## ► Standard equipment

The same as HR3850

## ► Repair

Apply the adhesive "screw lock super 20Q (TB1321B)" when tightening the hexagon socket head cap screw M6x12 for tool retainer locking.

The standard equipment for the tools shown may differ form country to country.