TECHNICAL INFORMATION

PRODUCT

Model No. ► HR3541FC, HR3540C

Description ► Combination Hammer 35mm (1-3/8")

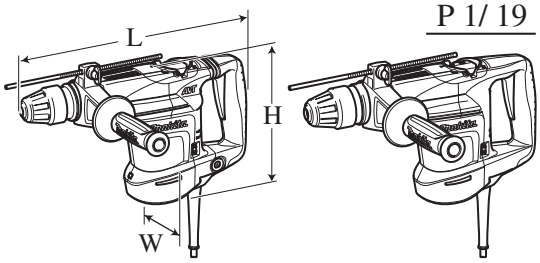

HR3541FC HR3540C

CONCEPT AND MAIN APPLICATIONS

Models HR3541FC and HR3540C have been developed from HR3200C series models as 35mm (1-3/8") SDS-Max rotary hammers.

Listed below are specification differences between the two models.

Model No.		HR3541FC	HR3540C
AVT	Active dynamic vibration absorber	Yes	No
	Vibration absorbing handle		
LED Job light		Yes	No

Dimensions: mm (")		
Model No.	HR3541FC	HR3540C
Length (L)	439 (17-1/4)	
Width (W)	114 (4-1/2)	108 (4-1/4)
Height (H)	239 (9-3/8)	

► Specification

Voltage (V)	Current (A)	Cycle (Hz)	Continuous Rating (W)		Max. Output (W)
			Input	Output	
110	8.6	50/60	850	300	1,100
120	8.2	50/60	---	300	1,100
220	4.4	50/60	850	300	1,100
230	4.4	50/60	850	300	1,100
240	4.4	50/60	850	300	1,100

Model No.			HR3541FC	HR3540C
No load speed: min-1=rpm			315 - 630	
Impacts per min: min-1=ipm			1,650 - 3,300	
Shank type			SDS-Max	
Shank diameter: mm (")			18 (11/16)	
Operation mode			3 modes (Rotation only/ Rotation with hammering/ Hammering only)	
Capacities: mm (")	Concrete	TCT bit	35 (1-3/8)	
		Core bit	90 (3-1/2)	
	Steel		13 (1/2)	
	Wood		32 (1-1/4)	
Torque limiter			Yes	
Electronic features	Variable speed control by dial		Yes	
	Soft start		Yes	
	Constant speed control		Yes	
Double insulation			Yes	
Power supply cord: m (ft)			Europe: 4.0 (13.1), Brazil: 2.0 (6.6), Other countries: 5.0 (16.4)	
Net weight: kg (lbs)			5.2 (11.4)	4.8 (10.6)
Weight according EPTA-Procedure 01/2003*: kg (lbs)			5.6 (12.3)	5.2 (11.4)

* includes Side handle.

► Standard equipment

Side handle (Bar-shaped) 1
Depth gauge 1
Grease vessel (containing 100g bit grease) 1
Plastic carrying 1
Cleaning cloth 1

Note: The standard equipment for the tool shown above may differ by country.

► Optional accessories

TCT bits
Core bits
Bull points
Cold chisels
Scaling chisels
Scaling chisel (for Tile)
Grooving chisel
Clay spade
Bushing tool
Rammer
Shank (for Bushing tool and Rammer)
Chemical anchor adapter
Bit grease
Grease vessel (containing 30g hammer grease)
Plastic carrying case
Blow out bulb
Safety goggles
Hammer service kit
Chuck adapter
Keyless drill chuck assembly

► Repair

CAUTION: Remove the Bit from the machine for safety before repair/ maintenance in accordance with the instruction manual!

[1] NECESSARY REPAIRING TOOLS

Code No.	Description	Use for
1R003	Retaining ring S pliers ST-2N	Removing / Assembling Ring spring 15
1R045	Gear extractor (large)	Removing Armature from Gear housing
1R346	Center attachment for 1R045	
1R212	Tip for Retaining ring pliers	Tip for Retaining ring pliers
1R228	1/4" Hex. shank bit for M4	Removing M4x25 Hex socket head bolt for tightening Crank housing
1R288	Screwdriver magnetizer	Magnetizing Screwdriver when removing Pin
1R230	1/4" Hex. shank bit for M6	Removing M6x25 Hex socket head bolt for tightening Barrel complete
1R269	Bearing extractor	Removing Ball bearings
1R367	Taper sleeve	Fitting Fluoride ring to Impact bolt

[2] LUBRICATIONS

Apply the following grease to protect parts and product from unusual abrasion.
* **Makita grease R.No.00**: the portions designated with **black triangles**
* **Makita grease N.No.2**: the portions designated with **gray** triangle

Item No.	Description	Portion to lubricate	Lubricant	Amount
(1)	Tool holder cap	The lip portion which accepts Bit shank	Makita grease N.No.2 ▽	a little
(5)	Tool retainer	The portion where Bit shank contacts		
(24)	Tool holder	The portion where Oil seal 32 in Barrel contacts	Makita grease R No.00 ▼	
(26) (27)	O Ring 19	The portion where (24) Tool holder contacts		
(32)	Cylinder 25	(a) The portion where Plane bearing 38 in Barrel contacts		
		(b) The space between Striker and Piston		approx. 2 g
(42) (43)	O Ring 18	The portion where (32) Cylinder 25 contacts		a little
(44)	Pin 7	The drum portion		
(48)	Spiral bevel gear 32	(c) The drum portion which is accepted by Plane bearing 40 in (82) Crank housing.		
		(d) Gear teeth		

Fig. 1

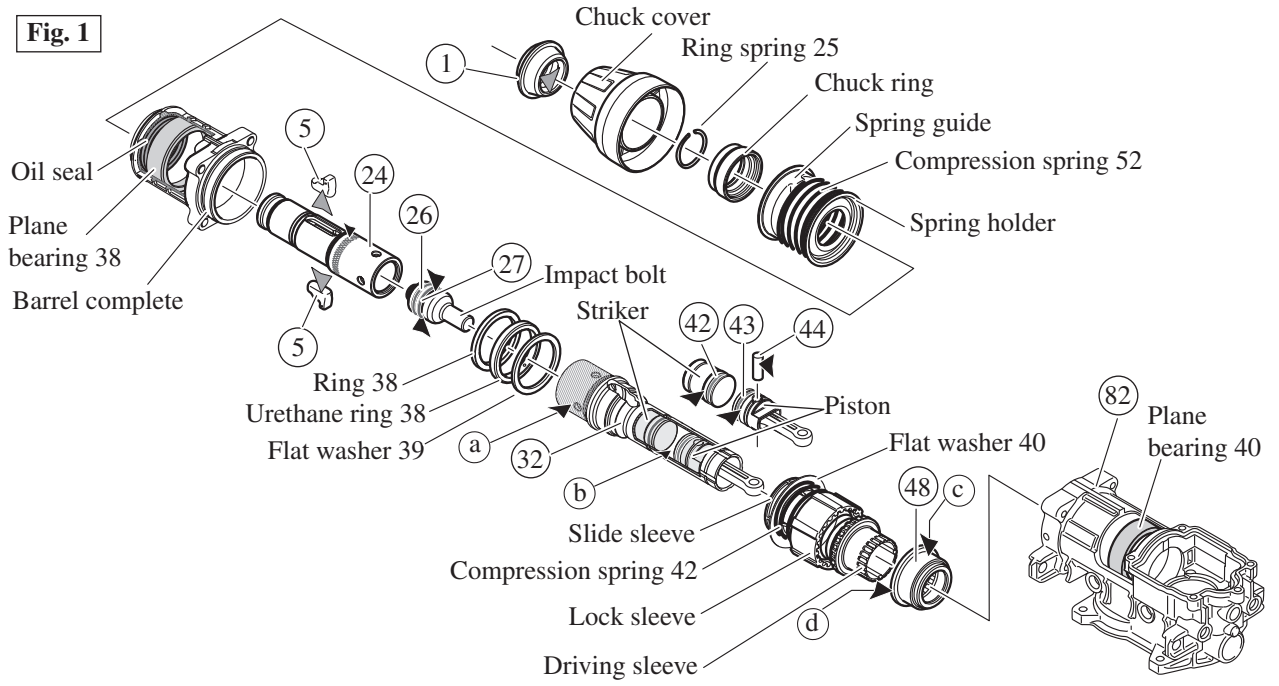

► Repair

[2] LUBRICATIONS (cont.)

Apply **Makita grease R.No.00** to the following portions designated with the black triangle to protect parts and product from unusual abrasion.

Item No.	Description	Portion to lubricate	Lubricant	Amount
50 52 61 63	O ring 8	Whole portion	Makita grease R No.00 ▼	a little
55 57	O ring 18	Whole portion		
58	Counter weight	The drum portion for smooth reciprocation in Pipe 15		
75	O ring 16	Whole portion		
76	Spur gear 33	Gear teeth for smooth engaging with Gear shaft		approx. 13g
82	Crank housing complete	Crank room		a little
86	Crank gear	Gear teeth for smooth engaging with Gear shaft		approx. 13g
101	Gear housing complete	Around Spur gear 33 and Torque limiter complete		a little
102	O ring 28	Whole portion		
107	Oil seal	The lip portion		

Fig. 2

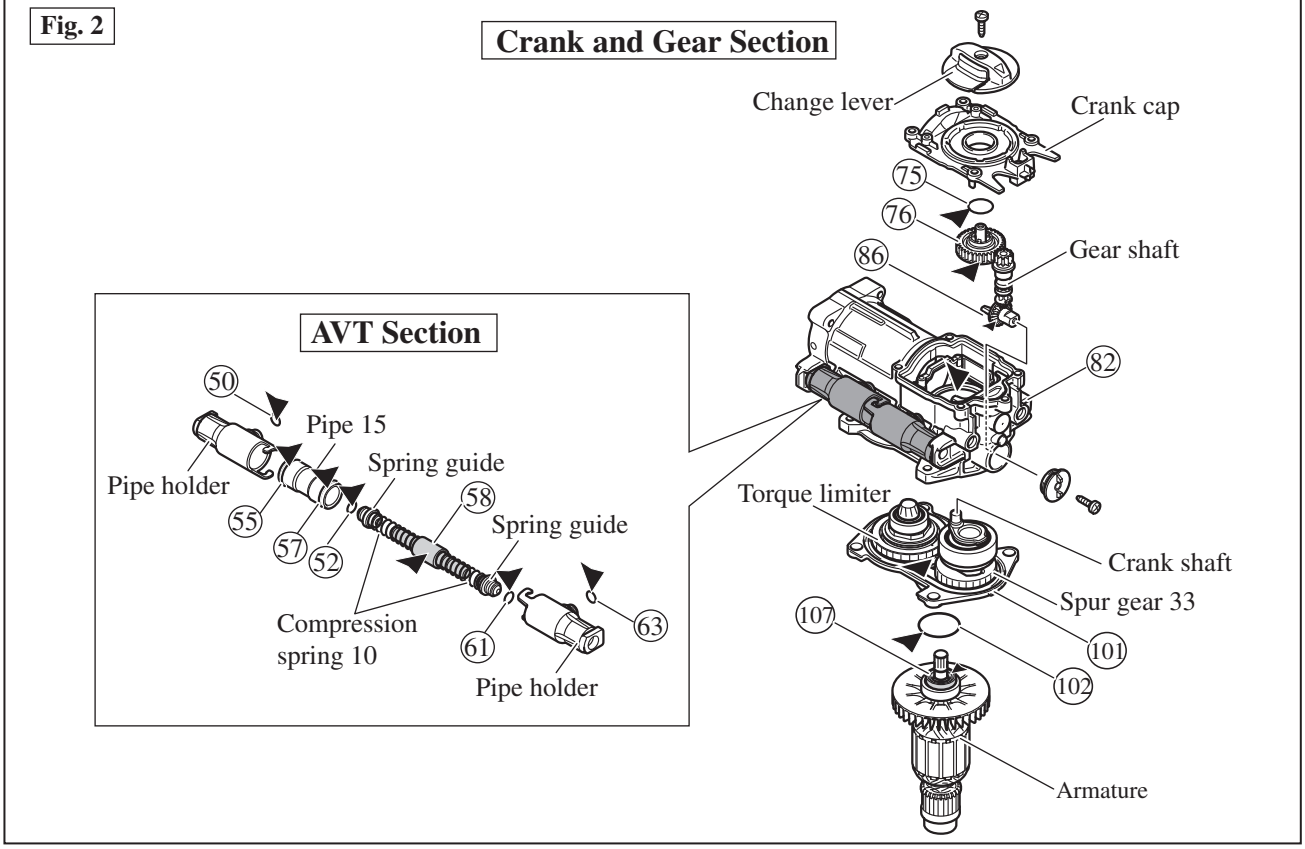

[3] Fastening Torque

When assembling Barrel complete to Crank housing complete, tighten with M6x25 Hex socket head bolts to **7.8 up to 11.8 N.m fastening torque**. (**Fig. 3**)

Fig. 3

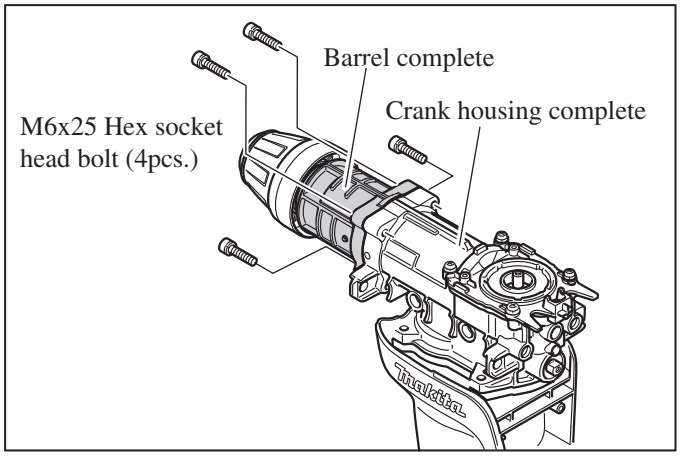

Repair

[4] Tapping Screws

4x14 and 4x18 Tapping screws are used as illustrated in **Fig. 4.** Pay attention not to confuse them.

Fig. 4

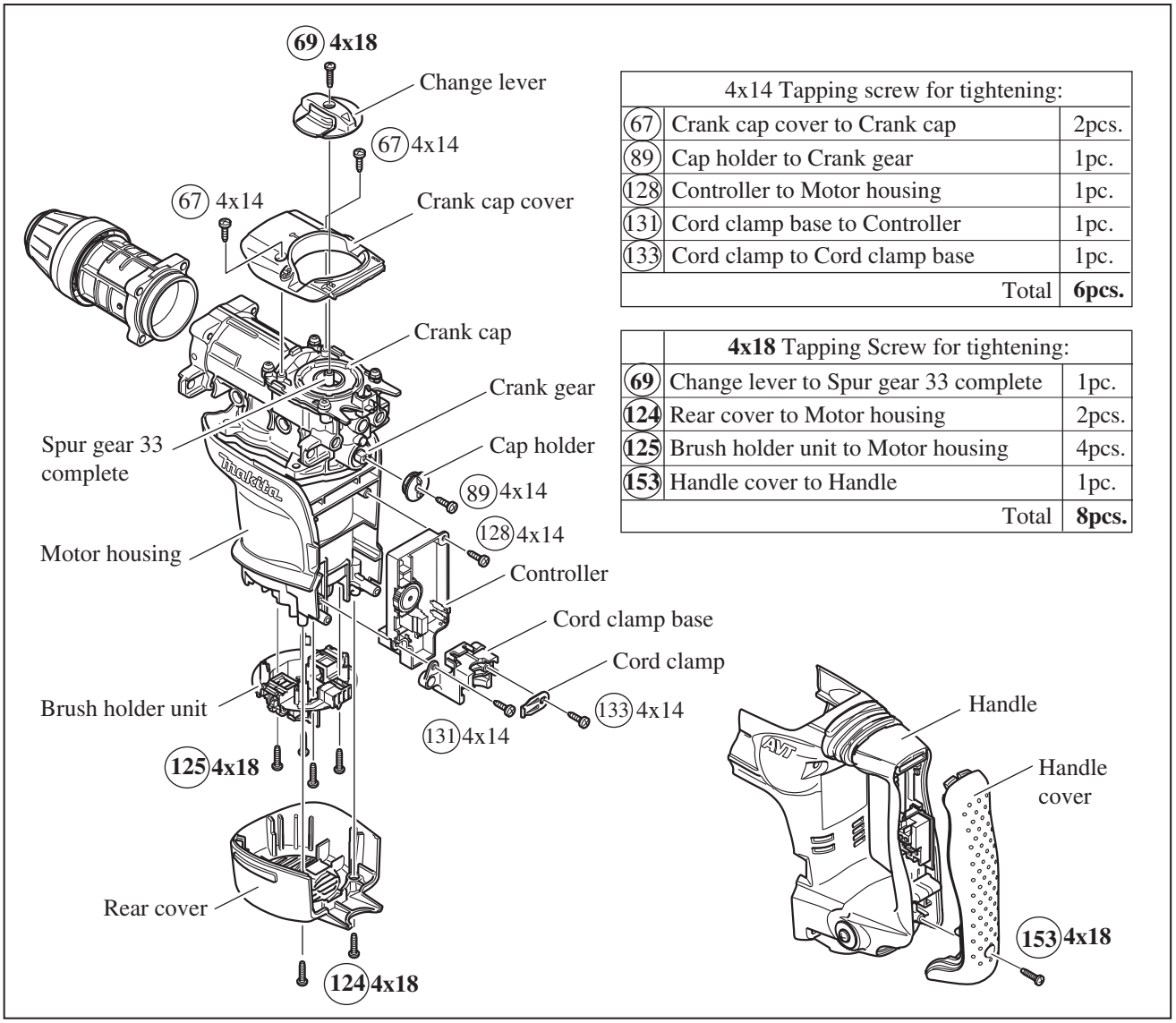

4x14 Tapping screw for tightening:		
67	Crank cap cover to Crank cap	2pcs.
89	Cap holder to Crank gear	1pc.
128	Controller to Motor housing	1pc.
131	Cord clamp base to Controller	1pc.
133	Cord clamp to Cord clamp base	1pc.
	Total	**6pcs.**

	4x18 Tapping Screw for tightening:	
69	Change lever to Spur gear 33 complete	1pc.
124	Rear cover to Motor housing	2pcs.
125	Brush holder unit to Motor housing	4pcs.
153	Handle cover to Handle	1pc.
	Total	**8pcs.**

Repair

[5] DISASSEMBLY/ASSEMBLY

[5]-1. Chuck

DISASSEMBLING

(1) Remove Controller and Handle section and then upright the machine as illustrated in **Fig. 5.**
(2) Disassemble Chuck section as illustrated in **Fig. 6.**

Fig. 5

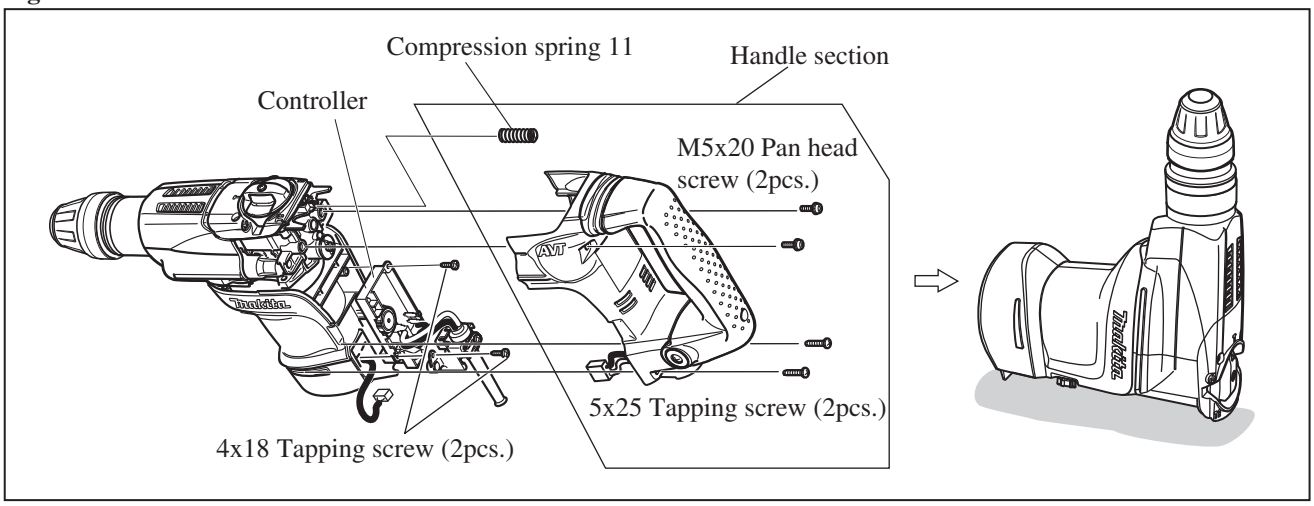

Fig. 6

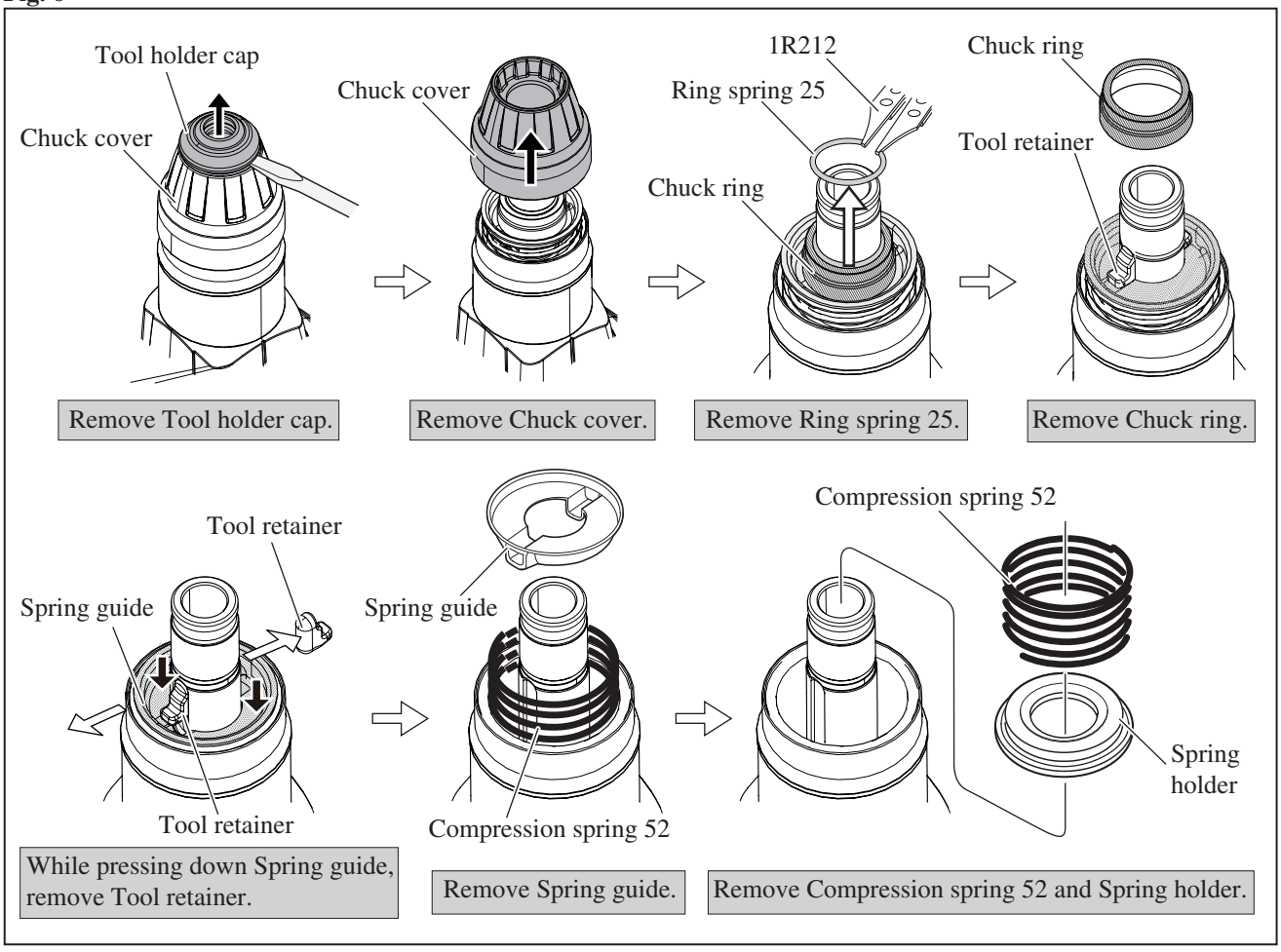

ASSEMBLING

Take the disassembling step in reverse**.**
Refer to **Figs. 6 and 5.**

► Repair

[5] DISASSEMBLY/ASSEMBLY

[5]-2. Tool holder section

DISASSEMBLING

(1) Disassemble Chuck section as illustrated in **Figs. 5 and 6**.
(2) Disassemble Tool holder section together with Cylinder section as illustrated in **Fig. 7**.
(3) Separate Tool holder section from Cylinder section as illustrated in **Fig. 8**.

Fig. 7

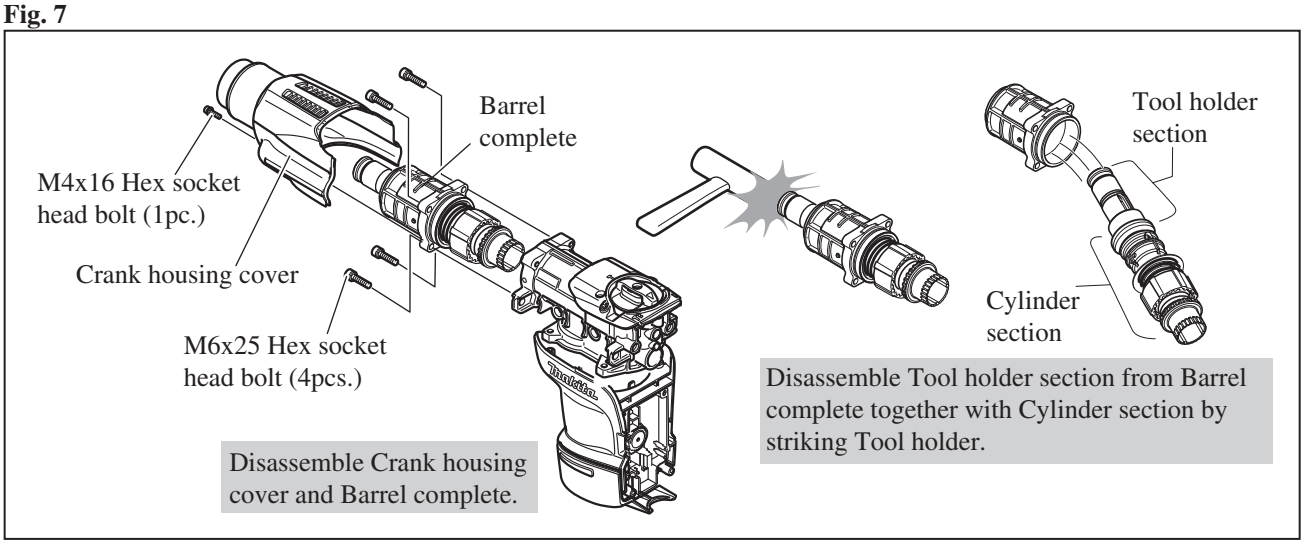

Fig. 8

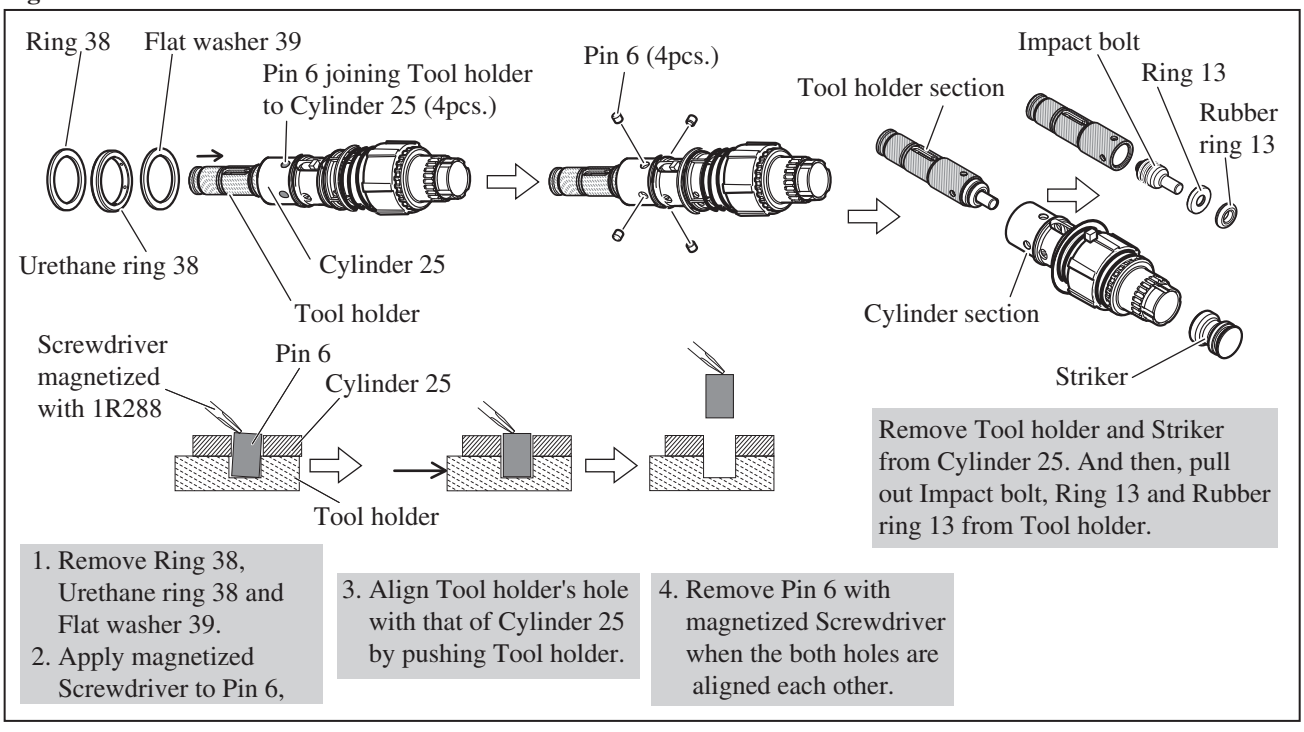

(4) If O ring 19 (black) can be seen through the worn Fluoro carbon resin ring 24 as illustrated in Fig. 9, all the Rings on Impact bolt have to be replaced by new ones.

Fig. 9

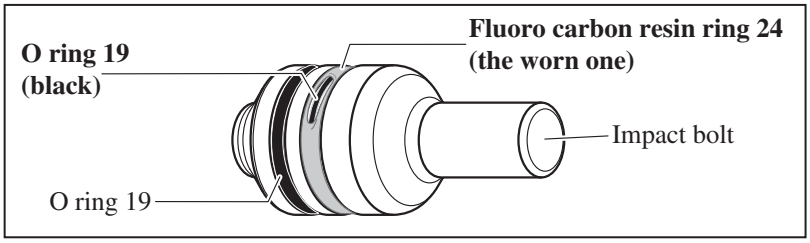

Repair

[5] DISASSEMBLY/ASSEMBLY

[5]-2. Tool holder Section (cont.)

ASSEMBLING

1) Replace Rings on Impact bolt as illustrated in **Fig. 10.**

Fig. 10

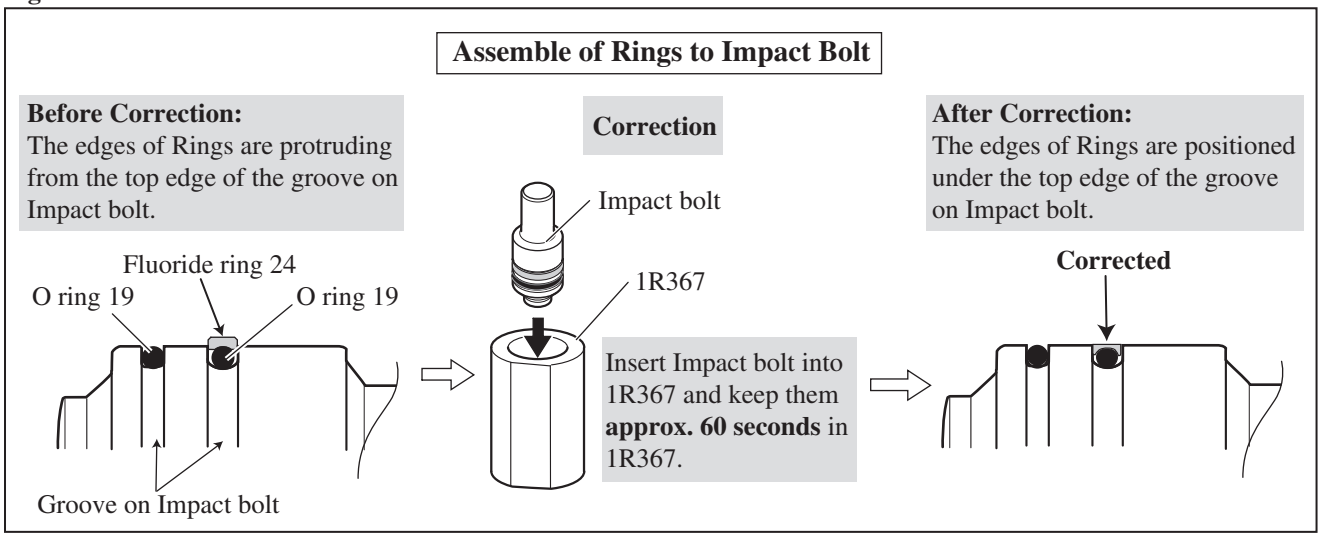

2) Take the the disassembling step in reverse. Refer to **Figs. 7 and 8**.
Note: Flat washer, and Rings have to be assembled to Cylinder 25 to fix Pin 6 as illustrated in **Fig. 11.**

Fig. 11

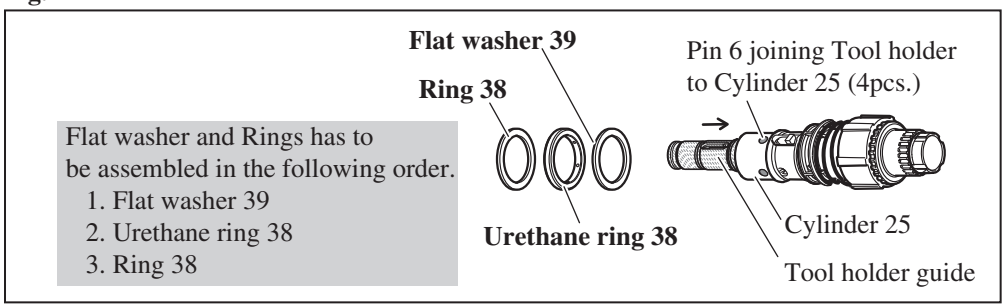

[5]-3. Cylinder Section

DISASSEMBLING

(1) Disassemble Chuck section as illustrated in **Figs. 5, 6**.
(2) Separate Cylinder section form Crank housing together with Tool holder section as illustrated in **Fig. 7**.
(3) Separate Cylinder section from Tool holder section as illustrated in **Fig. 8**.
(4) Cylinder section is disassembled as illustrated in **Fig. 12**.

Fig. 12

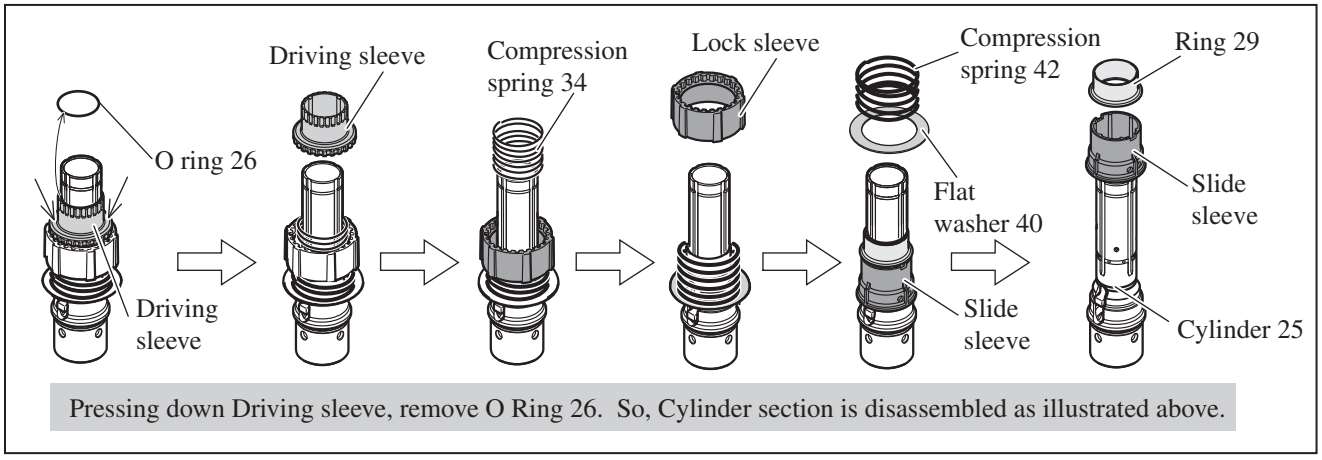

► Repair

[5] DISASSEMBLY/ASSEMBLY

[5]-3. Cylinder section (cont.)

DISASSEMBLING

(5) Remove Slide plate from Cylinder 25 as illustrated in **Fig. 13**.

Fig. 13

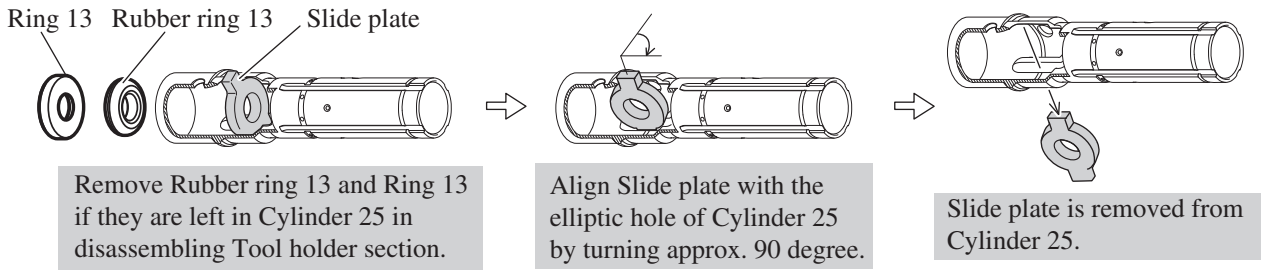

ASSEMBLING

Take the disassembling step in reverse. Refer to **Figs. 13 and 12.**
Join the assembled Cylinder section to Tool holder with Pin 6. Refer to **Fig. 8** And Secure Pin 6 with Flat washer 39, Urethane ring 38 and Ring 38 as illustrated in **Fig. 11**.

Note: Ring 13 is not reversible. Assemble it to Impact bolt as illustrated in **Fig. 14**.

Fig. 14

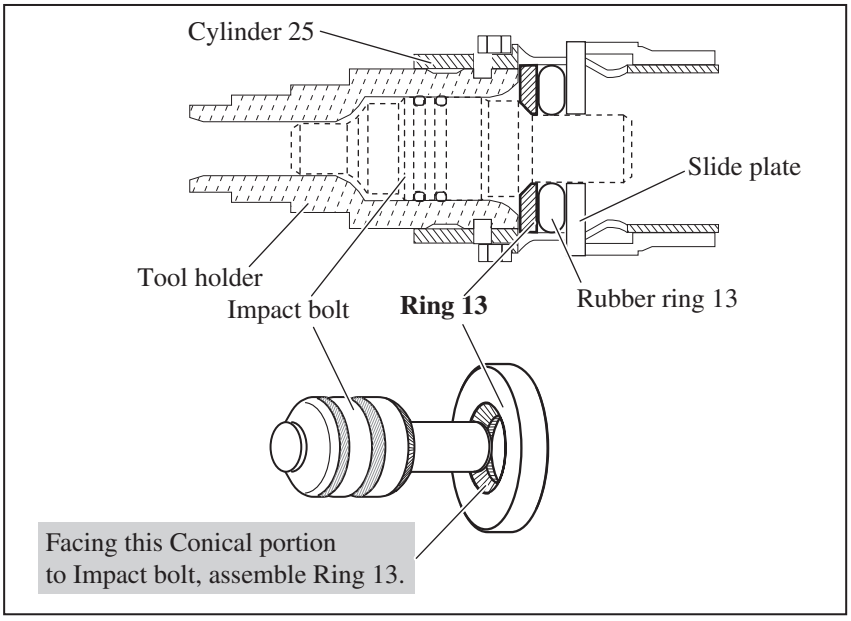

Repair

[5] DISASSEMBLY/ASSEMBLY

[5] -4. Active Dynamic Vibration Absorber

DISASSEMBLING

(1) Disassemble Crank housing cover. (**Fig. 7**)
Then remove Crank cap cover as illustrated in **Fig. 15.**

Fig. 15

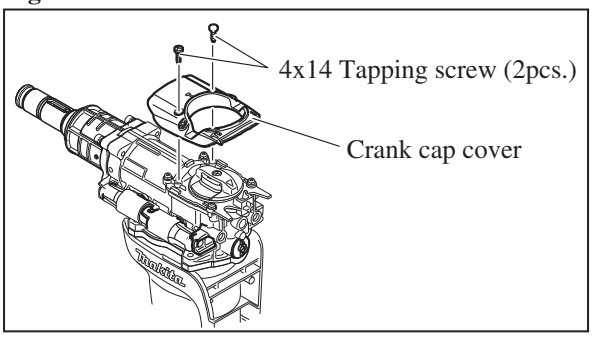

(2) Remove Active Dynamic Vibration Absorber from Crank housing complete as illustrated in **Fig. 16**.
And disassemble as illustrated in **Fig. 17**.

Fig. 16

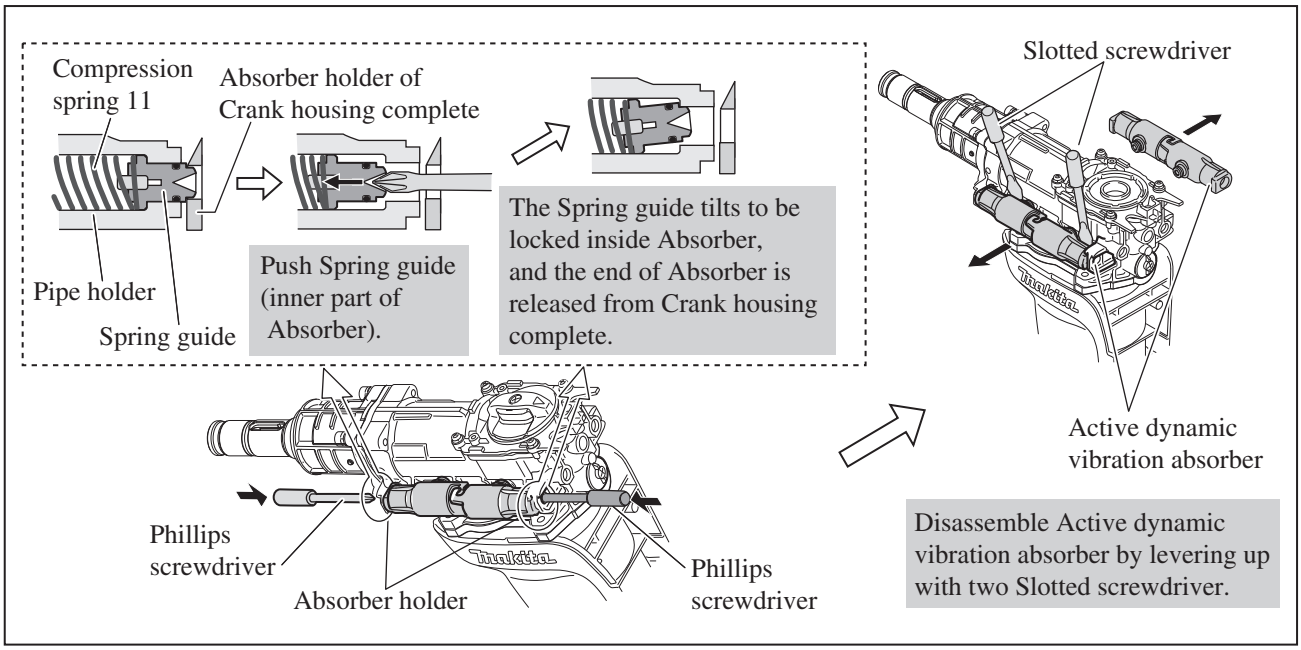

Fig. 17

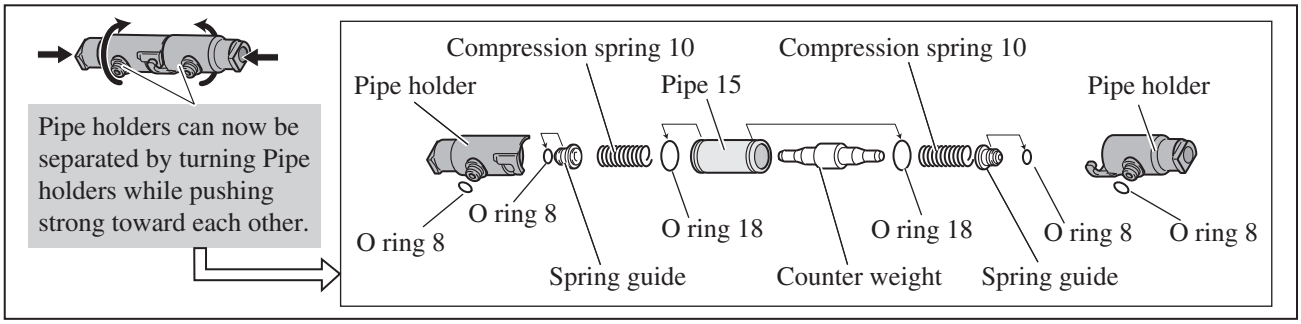

Repair

[5] DISASSEMBLY/ASSEMBLY

[5] -4. Active Dynamic Vibration Absorber (cont.)

ASSEMBLING

(1) Assemble Active dynamic vibration absorber. Refer to **Fig. 17**.
(2) Set Spring guide to the position in place as illustrated in **Fig. 18**.
(3) Mount the Active dynamic vibration absorber on the both side of Crank housing complete. (**Fig. 19**)
(4) After the step of **Fig. 19**, take the reverse of disassembling.

Fig. 18

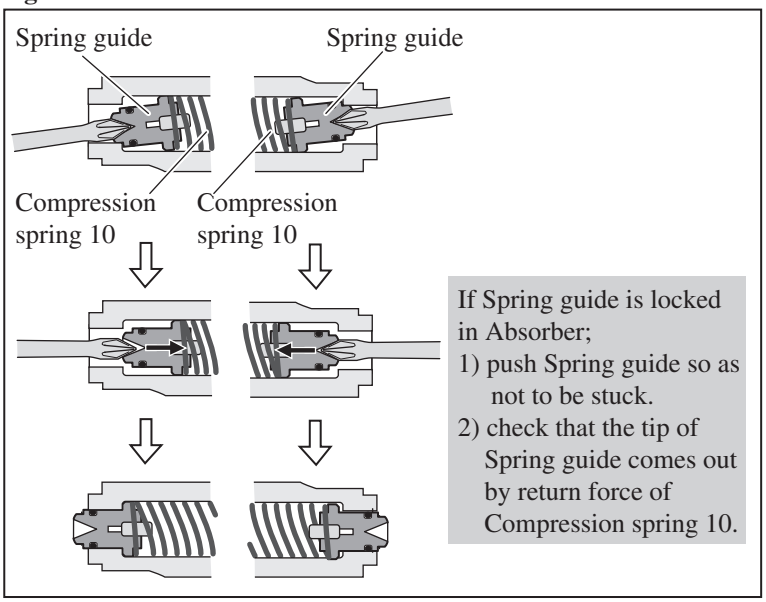

Fig. 19

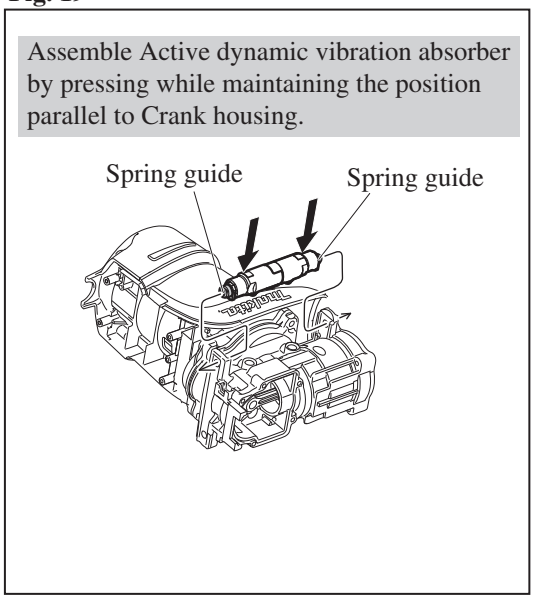

[5] -5. Motor Section, Torque Limiter Section

DISASSEMBLING

(1) Disassemble Chuck section. (**Figs. 5, 6**).
(2) Remove Crank housing cover. (**Fig. 7**)
(3) As illustrated in **Fig. 20,** disassemble Crank cap cover, Active dynamic vibration absorber, Handle section and Rear cover from Crank housing complete and Motor housing.

Fig. 20

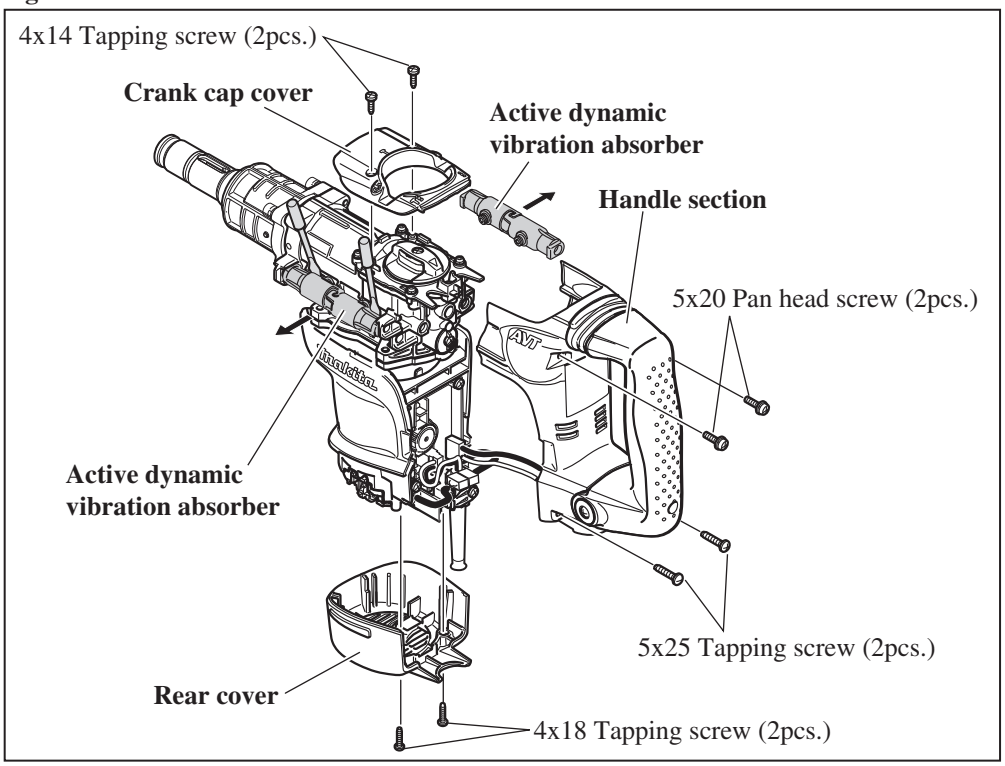

► Repair

[5] DISASSEMBLY/ASSEMBLY

[5] -5. Motor Section, Torque Limiter Section

DISASSEMBLING

4) Disconnect connectors to disassemble Handle section as illustrated in **Fig. 21**.

Fig. 21

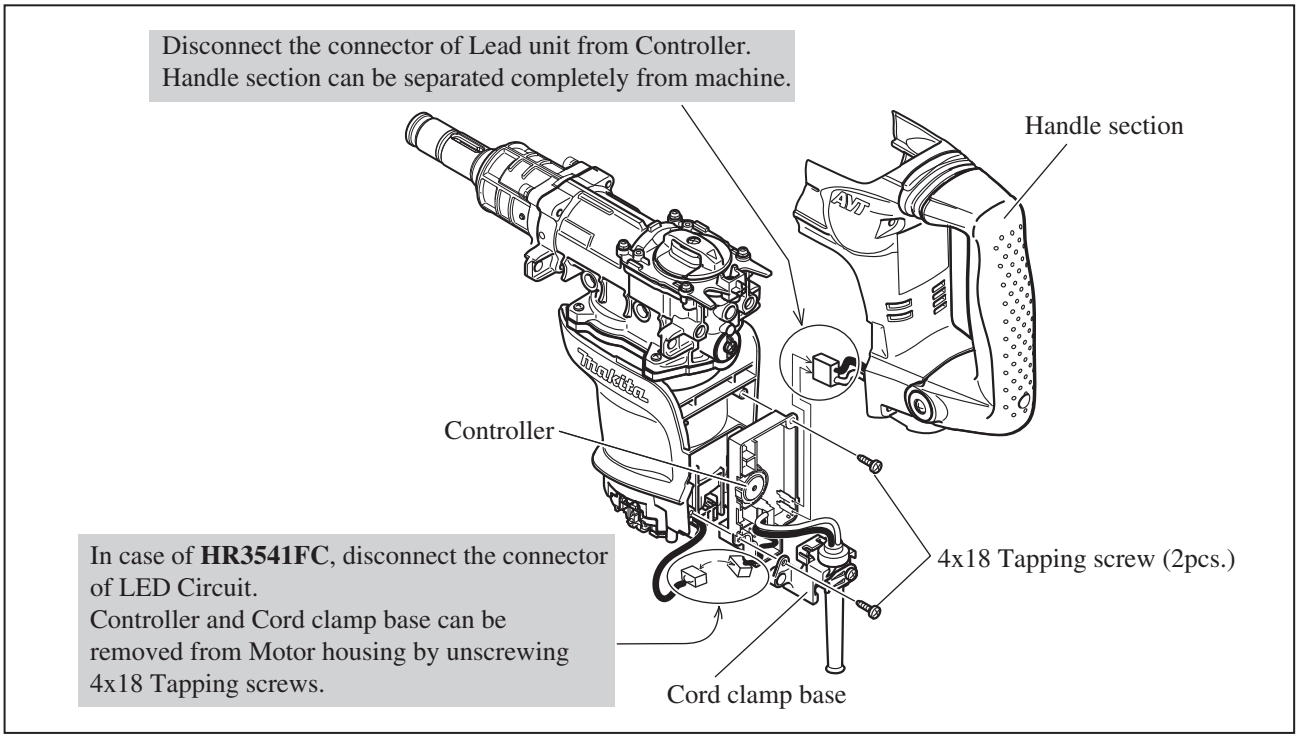

5) Disconnect the contact between Carbon brush and Commutator as illustrated in **Fig. 22**.

Fig. 22

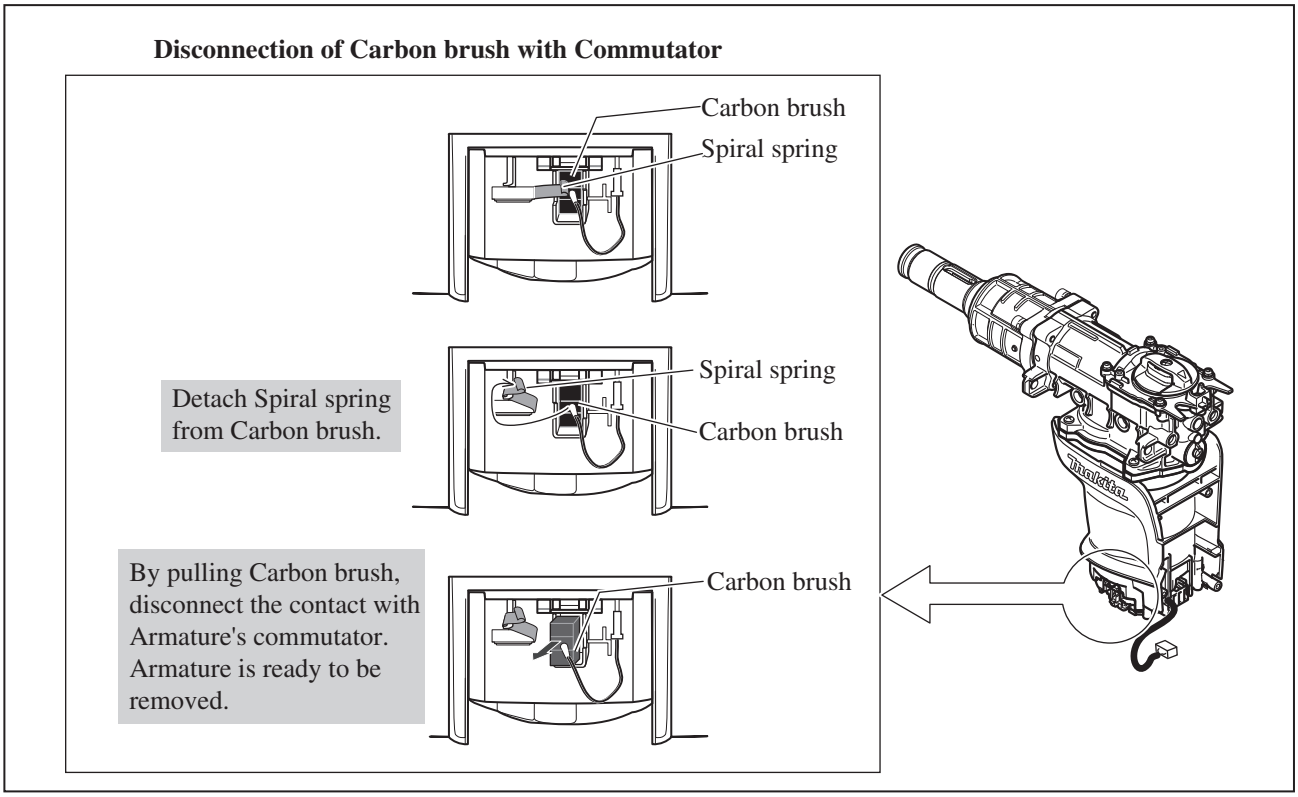

Repair

[5] DISASSEMBLY/ASSEMBLY

[5] -5. Motor Section, Torque Limiter Section (cont.)

DISASSEMBLING

6) Remove Armature as illustrated in **Figs. 23 and 24.**

Fig. 23

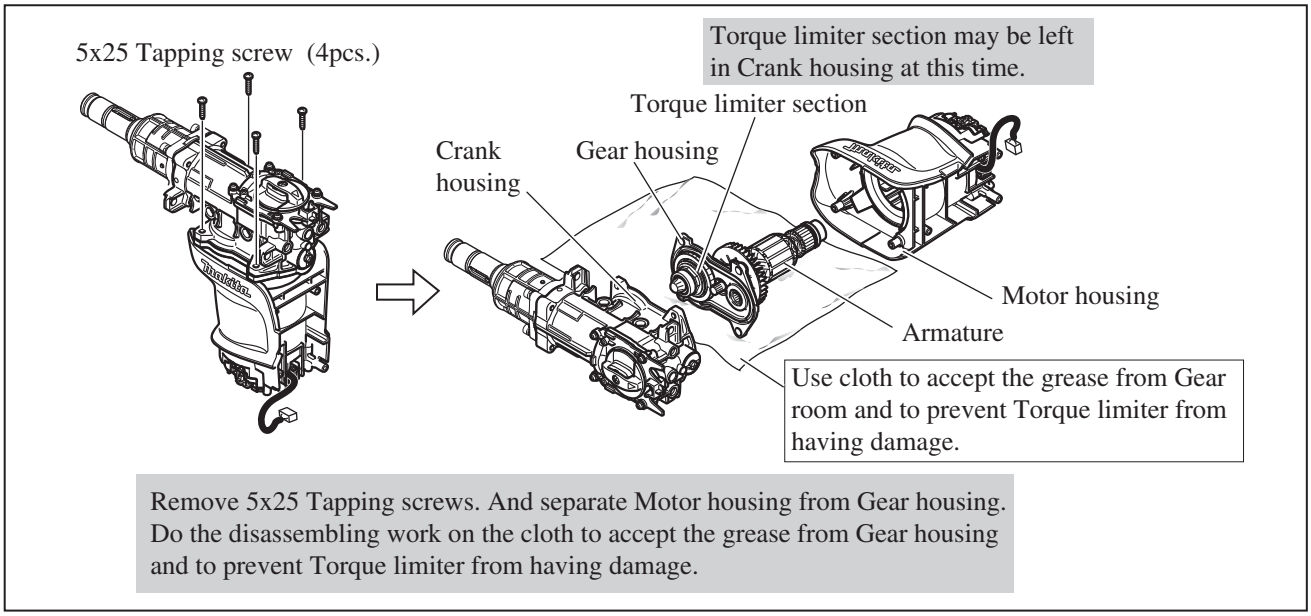

Fig. 24

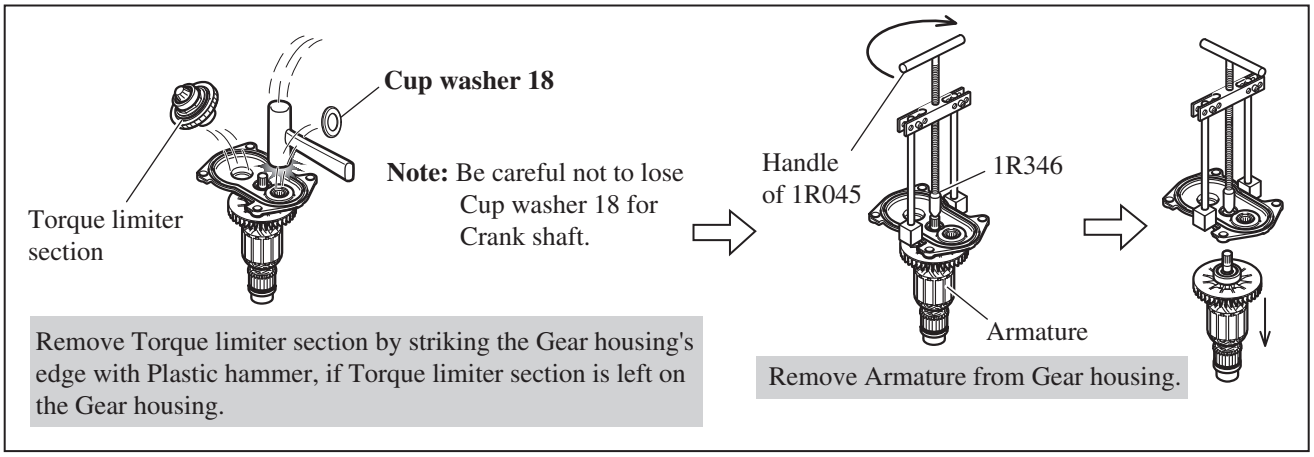

7) Torque limiter section can be disassembled as illustrated in **Fig. 25**.

Fig. 25

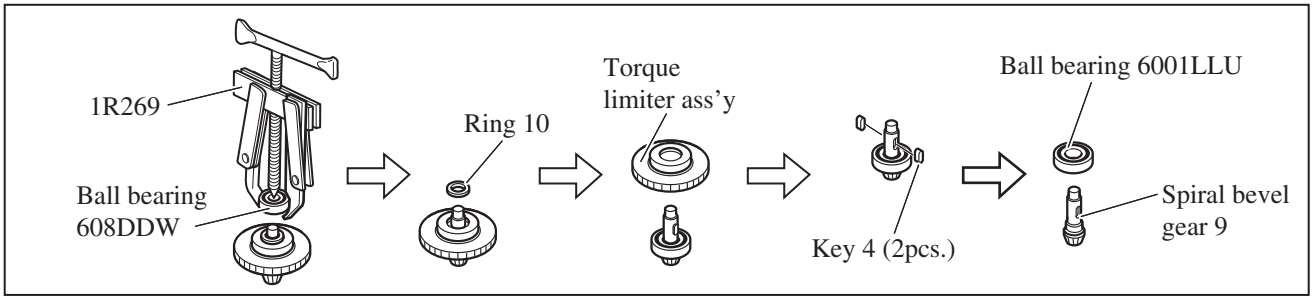

ASSEMBLING

Take the disassembling step in reverse. Refer to **Figs. from 25 to 20**.

► Repair

[5] DISASSEMBLY/ASSEMBLY

[5] -6. Gear Section in Crank Housing Complete

DISASSEMBLING

1) Disassemble Handle Section. (**Fig. 5**) And then, disassemble Chuck Section (**Fig. 6**)
2) Remove Crank housing cover and Barrel complete together with Cylinder section. (**Fig. 7**)
3) Set Change lever to Rotary hammer mode as illustrated in **Fig. 26**. Remove Crank cap cover. (**Fig. 15**)
4) Disassemble Active Dynamic Vibration Absorber. (**Fig. 16**)
5) Remove Rear cover from Motor housing. (**Fig. 20**)
6) Disconnect the contact between Carbon brush and Commutator. (**Fig. 22**)
7) Separate Crank housing complete from Motor housing. (**Fig. 23**)
8) If it is omitted to set Change lever to Rotary Hammer Mode in removing Crank cap cover, set Change lever as illustrated in **Fig. 26A.**
9) Disassemble the remaining parts as illustrated in **Figs 27 and 28.**

Fig. 26

Set Change lever to Rotary hammer mode.

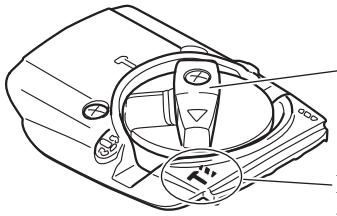

Fig. 26A

If Crank cap is already removed, align the triangle mark on Change lever with that on Crank cap.

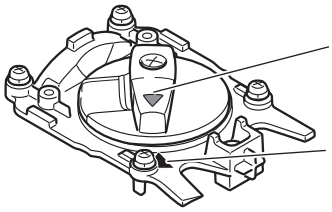

Fig. 27

M4x16 Pan head screw: 5 pcs.

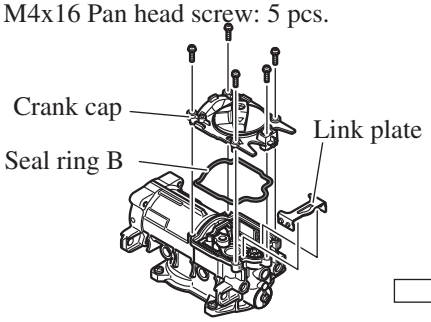

Remove Crank cap by unscrewing M4x16 Pan head screws. And then, remove Link plate.

Note: When disassembling Crank cap, do not move Change lever from the position illustrated in **Fig. 26A**.

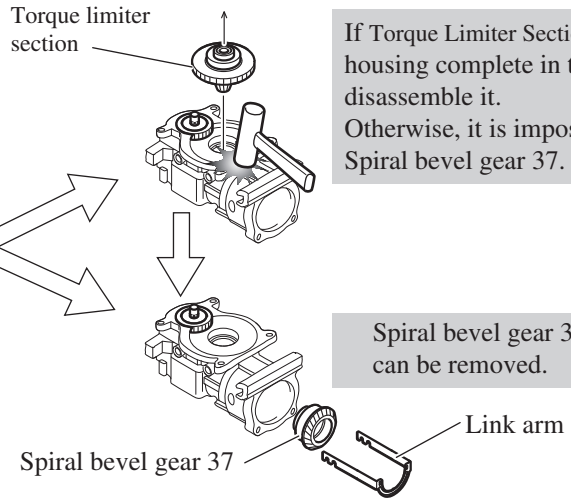

If Torque Limiter Section is left in Crank housing complete in the step of **Fig. 28**, disassemble it.
Otherwise, it is impossible to remove Spiral bevel gear 37.

Spiral bevel gear 37 and Link arm can be removed.

Fig. 28

Piston and Crank at the dead point on Striker side

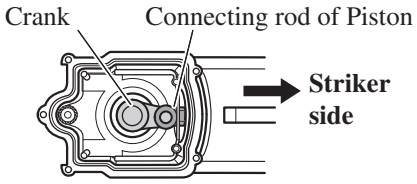

Set Crank and Piston to the dead point on Striker side.

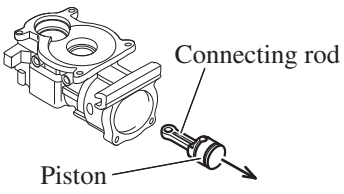

Because Cylinder 25 has been already removed, Connecting rod can be easily disassembled from Pin of Crank shaft. Now pull out Piston from Crank housing complete.

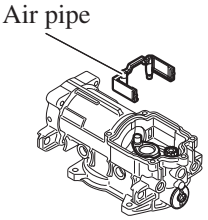

Remove Air pipe.

► Repair

[5] DISASSEMBLY/ASSEMBLY

[5] -6. Gear Section in Crank Housing Complete (cont.)

DISASSEMBLING

(10) Gear unit for Changing operation mode is still left in Crank housing complete. Without removing this Gear unit, it is impossible to disassemble Crank section.
Disassemble in order of Gear shaft and Crank gear as illustrated in **Fig. 29**.

Fig. 29

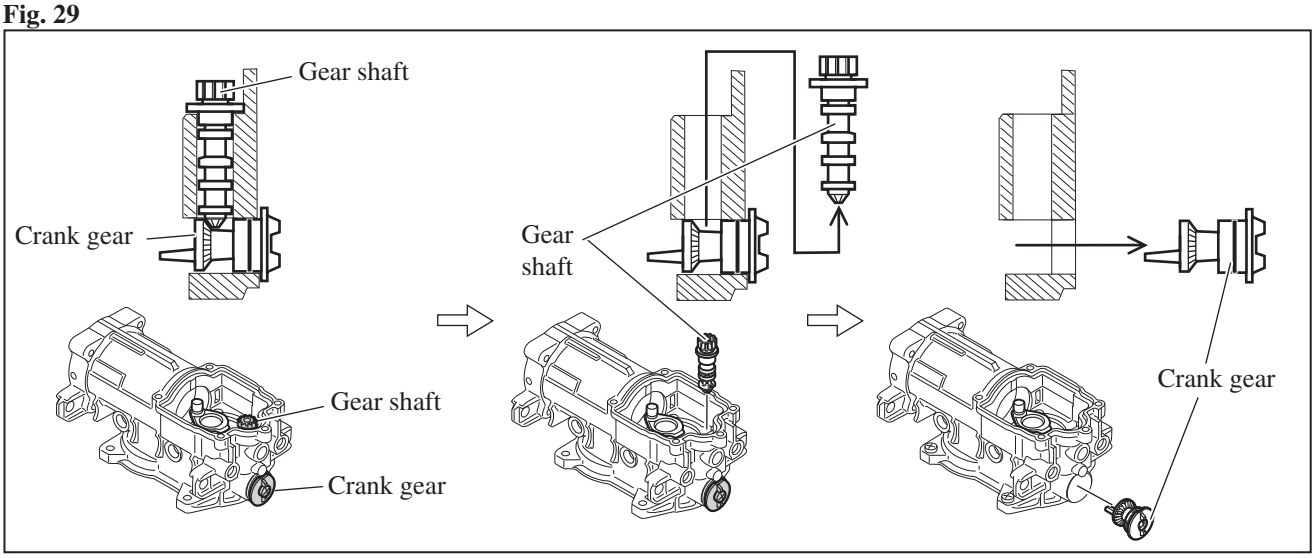

(11) Crank Section can be disassembled as illustrated in **Fig. 30**.

Fig. 30

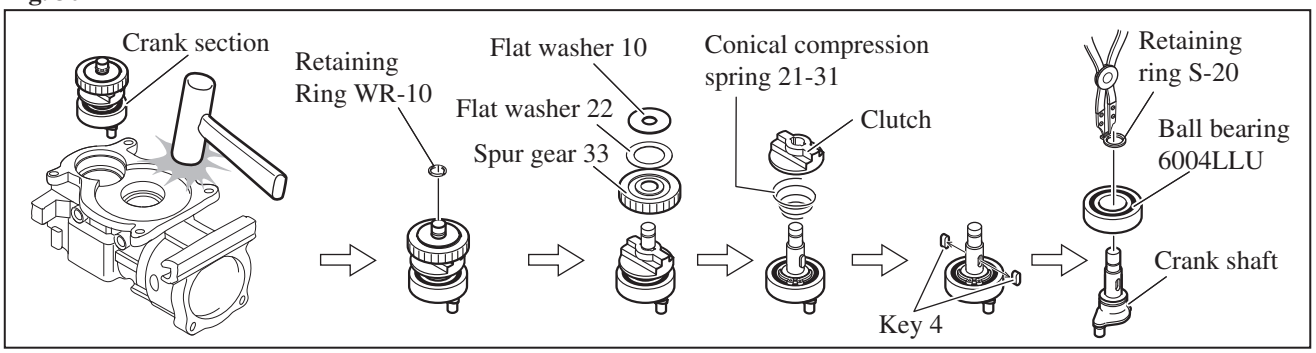

ASSEMBLING

(1) Assemble Crank section by taking the reverse of Disassembling steps. Refer to **Fig. 30**.
And then, mount the Crank section to Crank housing complete.
Note: When assembling Retaining ring WR-10 to Crank shaft, assemble it as illustrated in **Fig. 31R**.

Fig. 31R

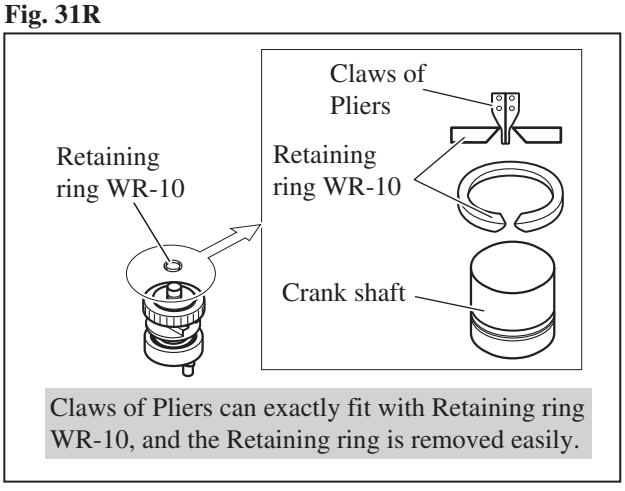

Claws of Pliers can exactly fit with Retaining ring WR-10, and the Retaining ring is removed easily.

Fig. 31F

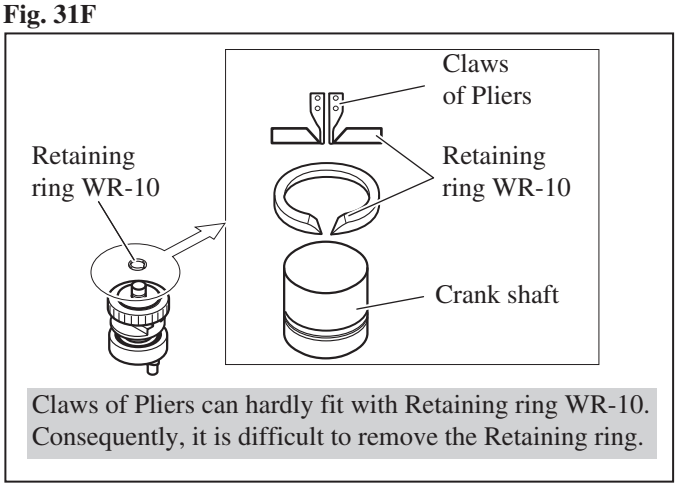

Claws of Pliers can hardly fit with Retaining ring WR-10. Consequently, it is difficult to remove the Retaining ring.

Repair

[5] DISASSEMBLY/ASSEMBLY

[3] -6. Gear Section in Crank Housing Complete

ASSEMBLING

(2) Assemble Gears for changing operation mode as illustrated in **Fig. 32**.

Fig. 32

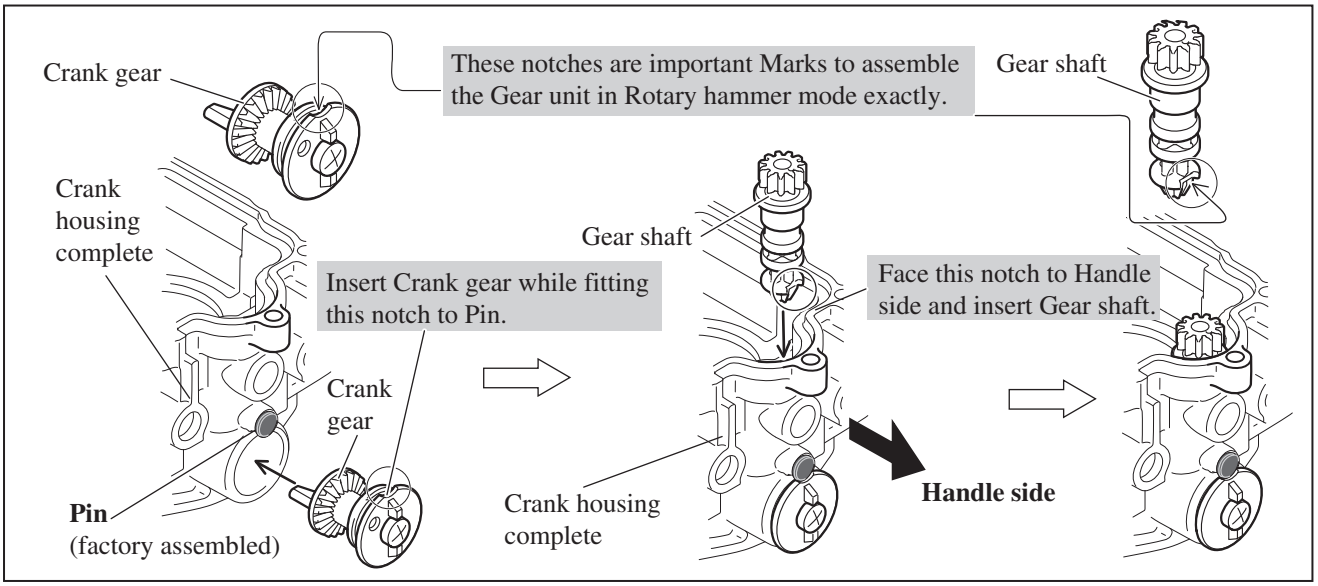

(3) Assemble Spiral bevel gear 37, Link arm, Seal ring B and Link plate as illustrated in **Fig. 33**. And assemble Crank cap as illustrated in **Fig. 34**.

(4) Assemble Crank cap cover. The triangle mark on Change lever has to designate the mark of Rotary hammer mode on Crank cap cover as illustrated in **Fig. 26**. And assemble the remaining parts by taking the reverse of the disassembling steps.

Fig. 33

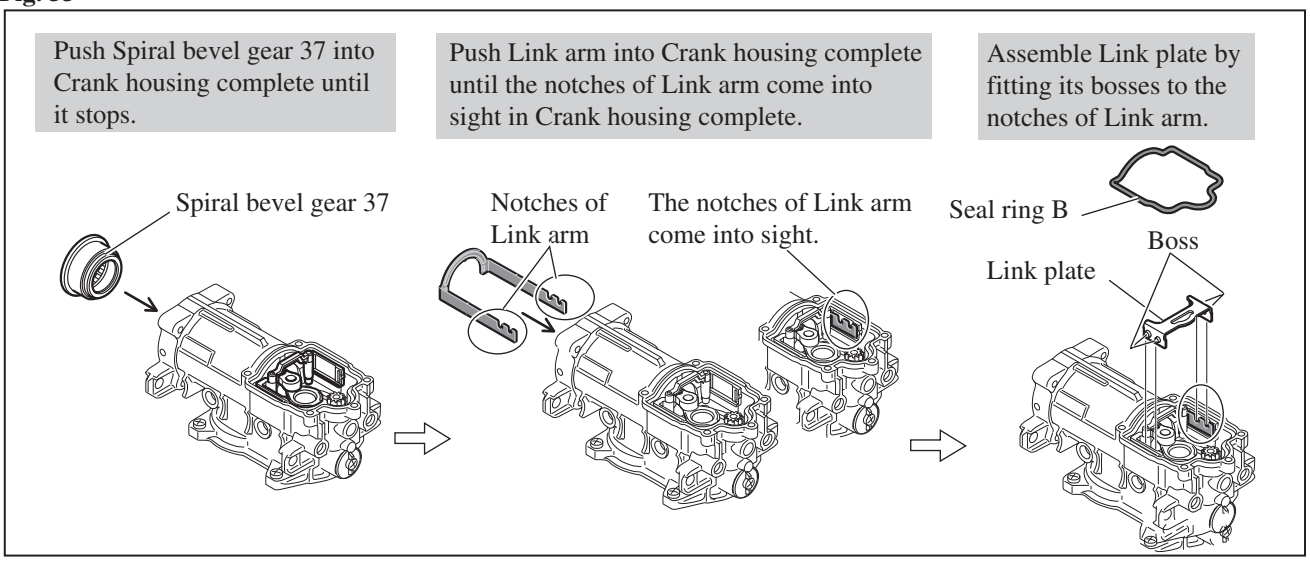

Fig. 34

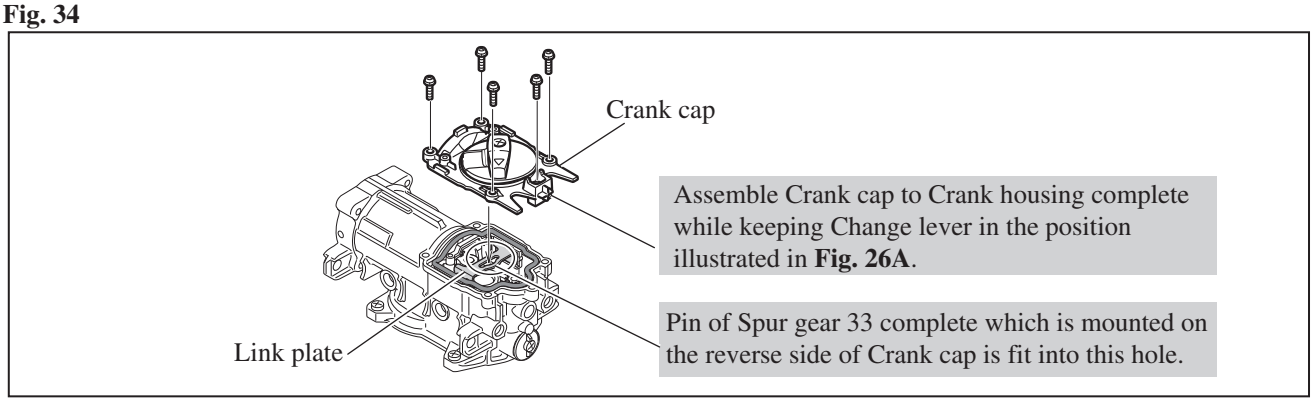

► Repair

[5] DISASSEMBLY/ASSEMBLY

[5] -7. Handle Section and Electrical Parts

DISASSEMBLING

(1) Disassemble Handle section as illustrated in **Figs. 20 , 21**.
(2) Controller and Power supply cord can be removed. (**Fig. 21**)
(3) **HR3540C**: Disassemble Handle cover. ON-OFF Switch can be replaced as illustrated in **Fig. 35**.
(3A) **HR3541FC**: After removing ON-OFF Switch, Handle section can be disassembled as illustrated in **Fig. 35A**.

Fig. 35

HR3540C

Unscrew 4x18 Tapping screw. And separate Handle cover with slotted screwdriver.

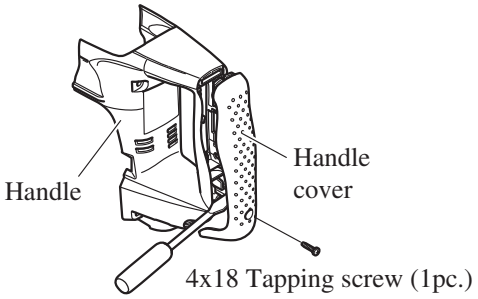

Replace ON-OFF Switch etc.

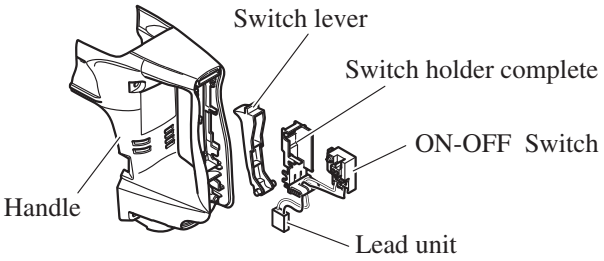

Fig. 35A

HR3541FC

Unscrew 4x18 Tapping screw. And separate Handle cover with Slotted screwdriver.

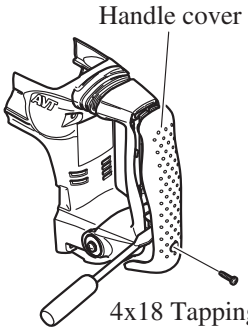

Replace ON-OFF Switch etc.

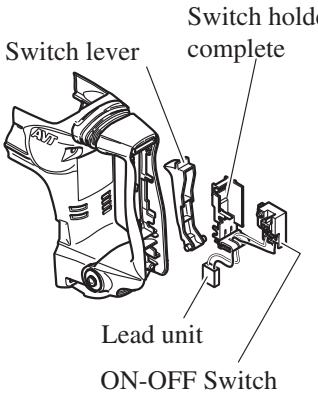

Handle Section can be disassembled as illustrated below.

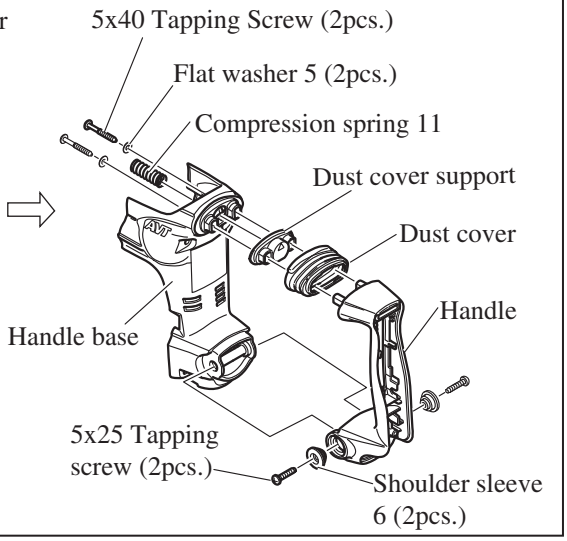

ASSEMBLING

Take the disassembling step in reverse.

Note: Dust cover support and Dust cover are directional. Refer to **Fig. 36**.

Fig. 36

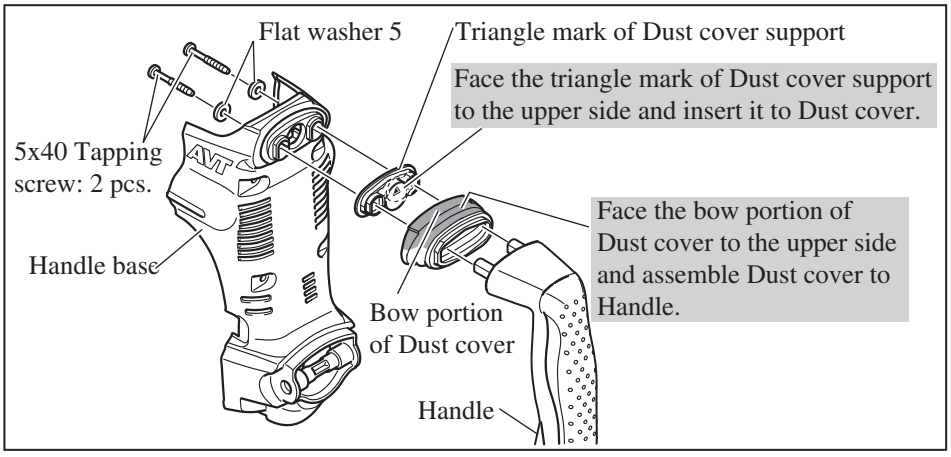

Repair

[6] MAINTENANCE PROGRAM

Replacing the following parts at the same time is recommended when replacing Carbon brushes is required. See **Fig. 37**.
Note: Be sure to put Makita grease R No. 00 and N No. 2 to the specific portions. Refer to **Figs. 1**, **2**.

Fig. 37

Item No.	Description
①	Tool Holder Cap
③	Ring Spring 25
㉖ ㉗	O ring 19 (for Impact bolt)
㉘	Fluoro carbon resin ring 24
㊷	O ring 18 (for Striker)
㊸	O ring 18 (thick type for Piston)
㊻	O ring 18 (thin type for Piston)

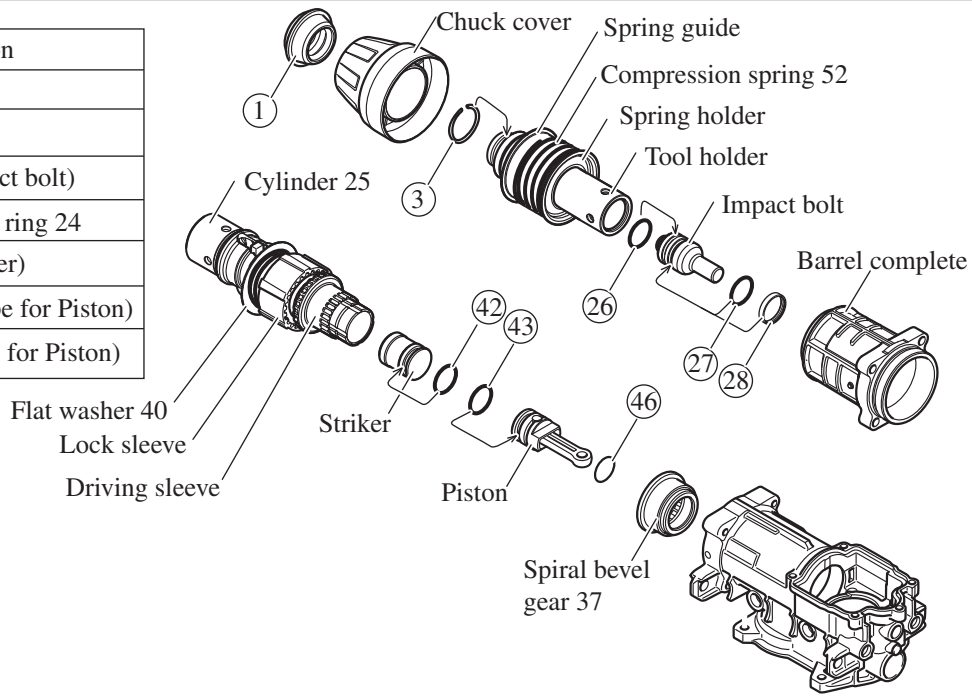

Circuit diagram

Fig. D-1

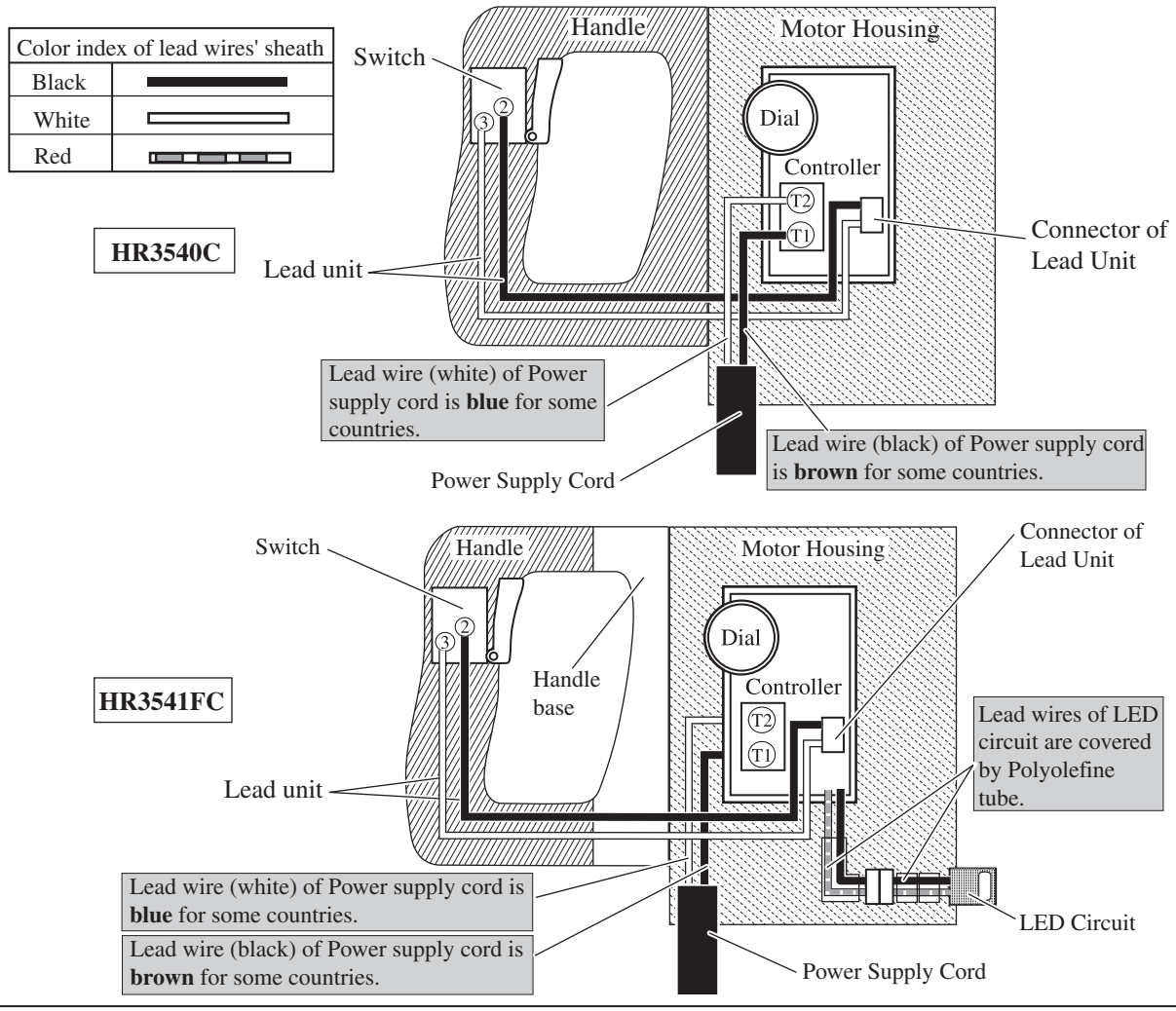

Wiring diagram

Fig. D-2

HR3540C

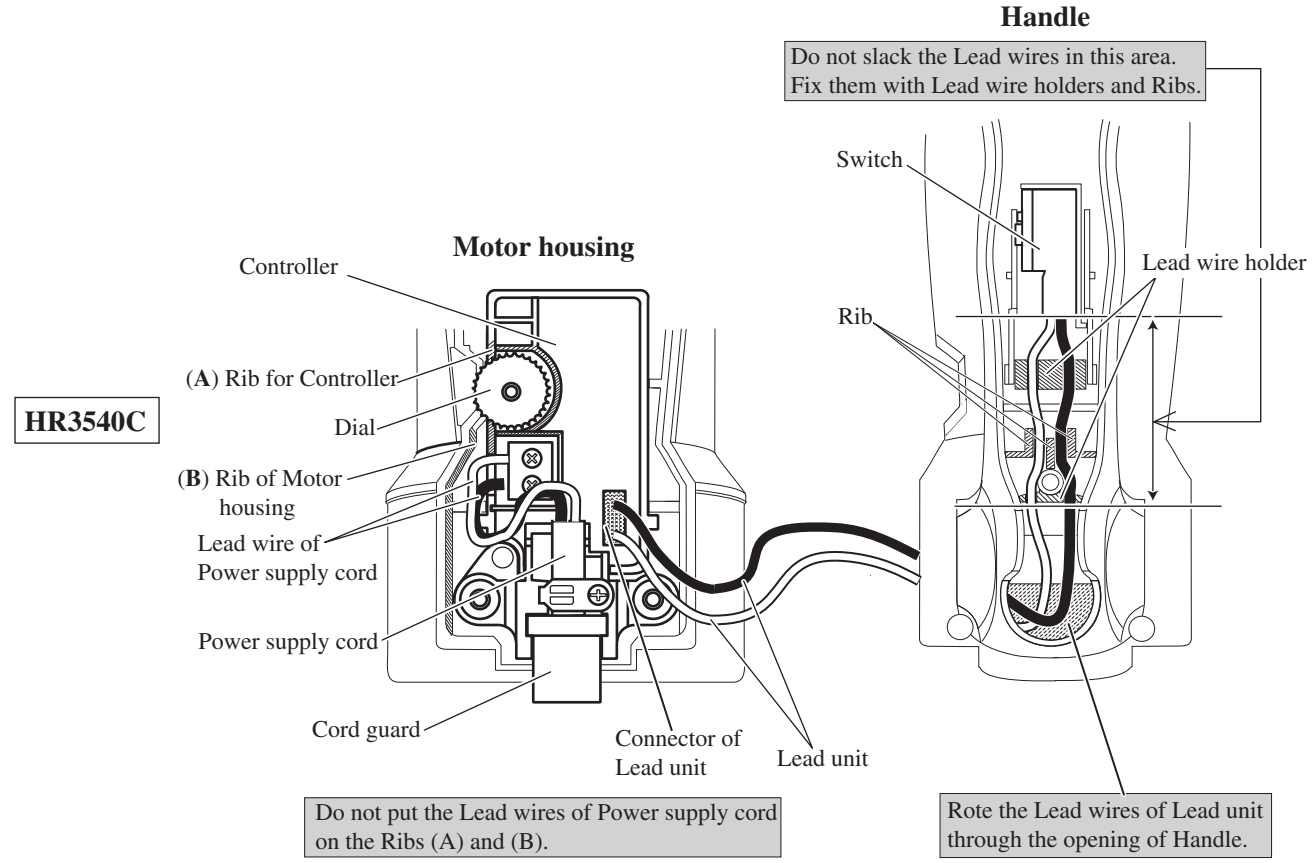

HR3541FC

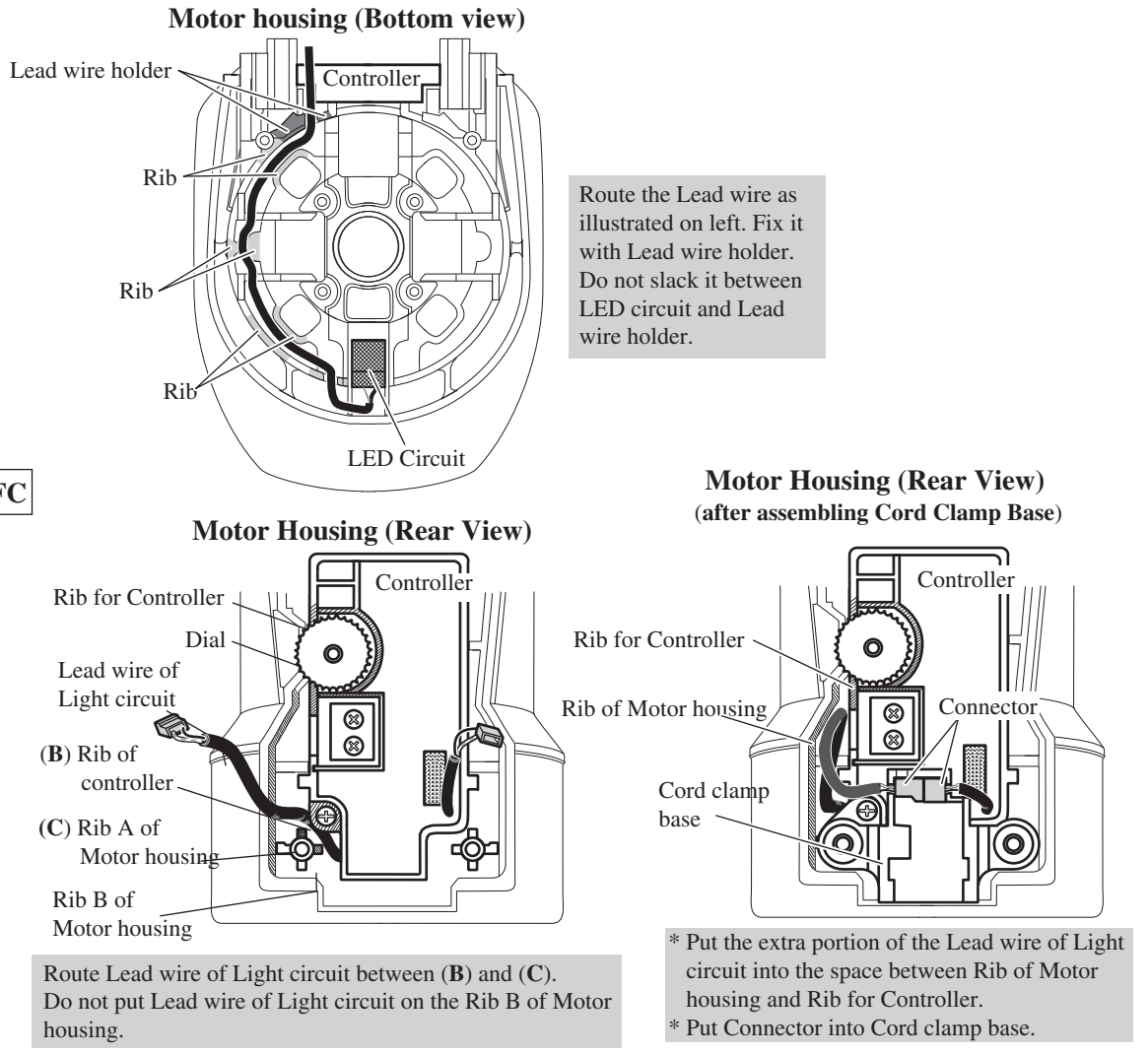

Wiring diagram
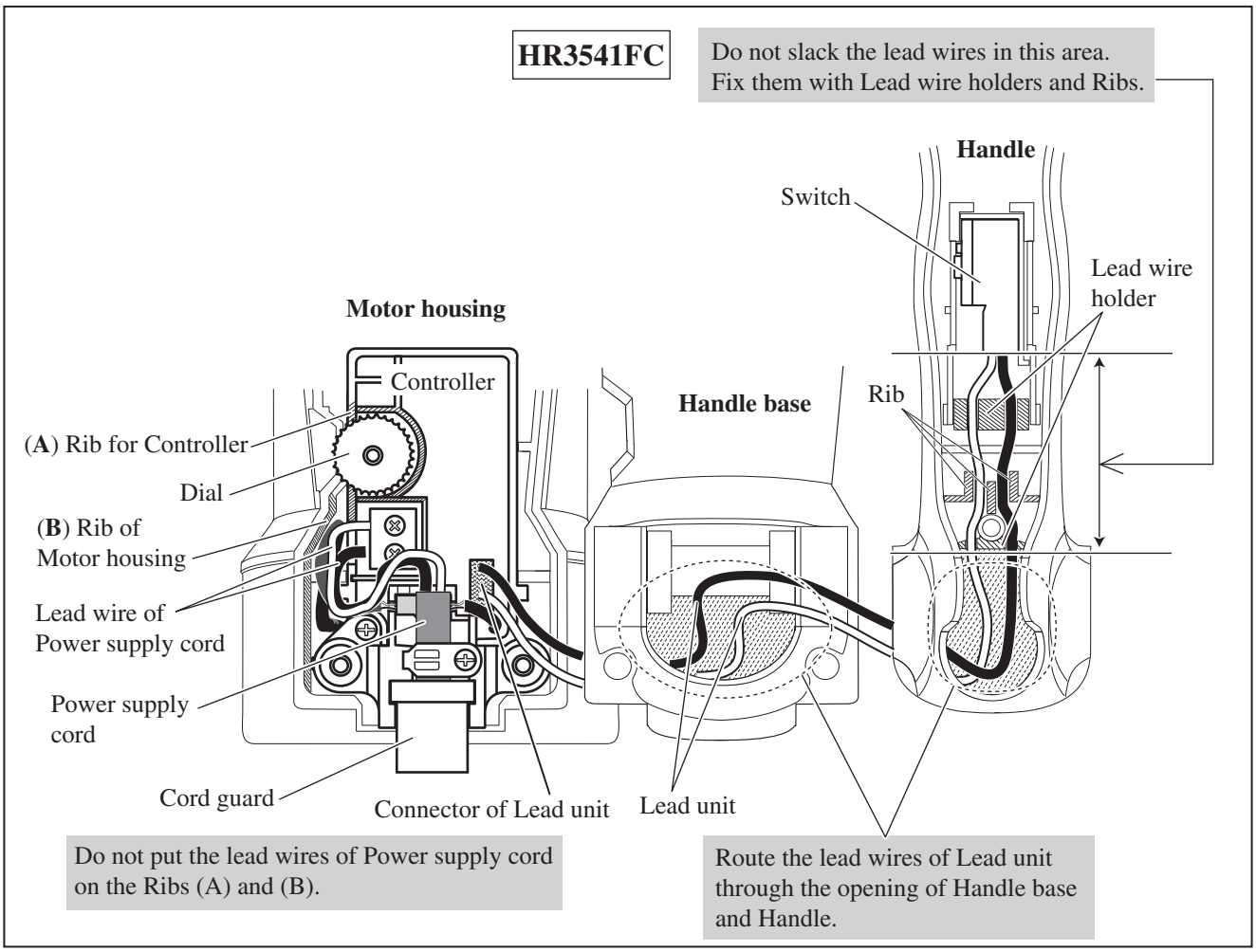
Fig. D-3