Models No. ► BTD140

Description ► Cordless Impact Driver

CONCEPT AND MAIN APPLICATIONS

Model BTD140 has been developed as the 18V version of the current 14.4V Cordless impact driver Model BTD130F.
18V battery delivers powerful 220W maximum output, yet still extra-lightweight design has been achieved by using 4-pole motor and Lithium-ion battery as power unit.
Features the same advantages as BTD130F as follows:

- High operation efficiency
- Hammer case without protrusion
- Job light with afterglow function
- Belt clip

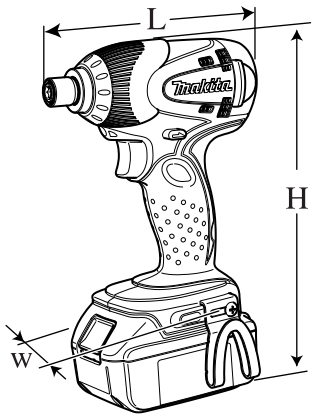

Dimensions: mm (")	
Length (L)	146 (5-3/4)
Width (W)	79 (3-1/8)
Height (H)	235 (9-1/4)

This new product will be available in the following variations.

Model No.	Battery		Charger	Offered to
	type	quantity		
BTD140	BL1830 (Li-ion 3.0Ah)	2	DC18SC	USA, Canada Mexico, Panama
BTD140SFE				All countries except those listed above

► Specification

Battery	Voltage: V	18
	Capacity: Ah	3.0
	Cell	Li-ion
Max output (W)		220
Driving shank		6.35mm (1/4") Hex
Capacities	Machine screw	M4 - M8 (5/32 - 5/16")
	Standard bolt	M5 - M14 (3/16 - 9/16")
	High tensile bolt	M5 - M12 (3/16 - 15/32")
	Coarse thread screw	22 - 125mm (7/8 - 4-7/8")
Impacts per min.: min.-1=bpm		0 - 3,200
No load speed: min.-1=rpm		0 - 2,300
Max. fastening torque: N.m (in.lbs)		145 (1,280)
Electric Brake		Yes
Variable speed (electric)		Yes
Reversing switch		Yes
Net weight*: kg (lbs)		1.5 (3.3)

*Includes battery BL1830

► Standard equipment

Belt clip 1
Plastic carrying case 1

Note: The standard equipment for the tool shown above may differ by country.

► Optional accessories

Charger DC18SC
Charger DC24SA
Charger DC24SC
Li-ion Battery 1830
Assorted Phillips bits
Assorted socket bits
Bit piece

Repair

CAUTION: Remove the battery from the machine for safety before repair/ maintenance !

[1] NECESSARY REPAIRING TOOLS

Code No.	Description	Use for	
1R045	Gear extractor (Large)	Disassembling Hammer mechanism	
1R346	Center attachment for 1R045		
1R288	Screwdriver magnetizer	Magnetizing screwdriver for removing Steel balls	
1R232	Pipe 30	Disassembling Bit holder mechanism	
1R291	Retaining ring S and R pliers		
1R041	Vise plate	Fixing Hammer case	when disassembling Hammer mechanism
1R223	Torque wrench shaft	Turning Hammer case	
1R224	Ratchet head		
134847-1	Socket 30-78		
134848-9	Socket 32-50	Fixing Hammer case	

[2] LUBRICATION

Apply Makita grease N. No.2 to the following portions designated with the black triangle to protect parts and product from unusual abrasion.

Item No.	Part description	Where to lubricate
20	Hammer case complete	Inside surface where twenty-four 3.5 Steel balls are installed
25	Steel ball 5.6	Whole surface
26	Spur gear 22	Gear teeth
27	Spindle	Cam groove top
28	Pin 5	Surface that contacts Spur gear 22
30	Internal gear 51	Gear teeth that engages with Spur gear 22 (Apply approx. 2g.)

Fig. 1

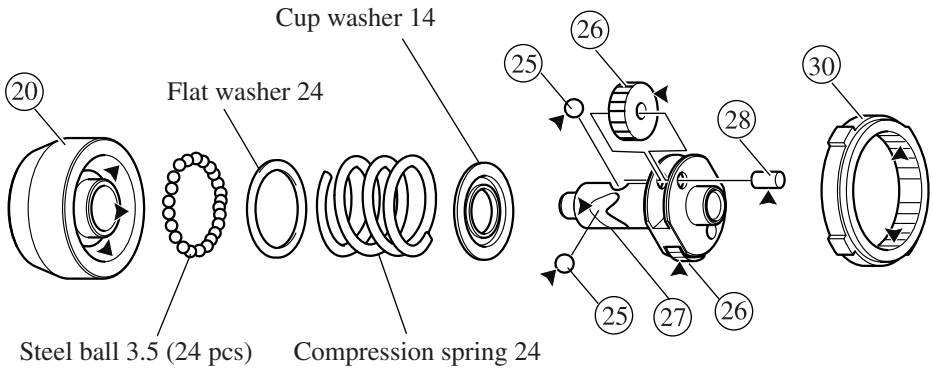

Repair

[3] DISASSEMBLY/ASSEMBLY

[3] -1. Disassembling/Assembling Hammering Mechanism

DISASSEMBLING

1) Remove Belt clip by unscrewing Screw M4x12. After removing Bumper and Hammer case cover by hand, then remove Rear cover by unscrewing two PT3x16 Tapping screws. (**Fig. 2**)

2) Shift the tail of torsion spring from Carbon brush onto the notch in Brush holder. Then pull off Receptacle from Brush holder. Now Carbon brush can be removed from Brush holder. (**Fig. 3**)

Fig. 2

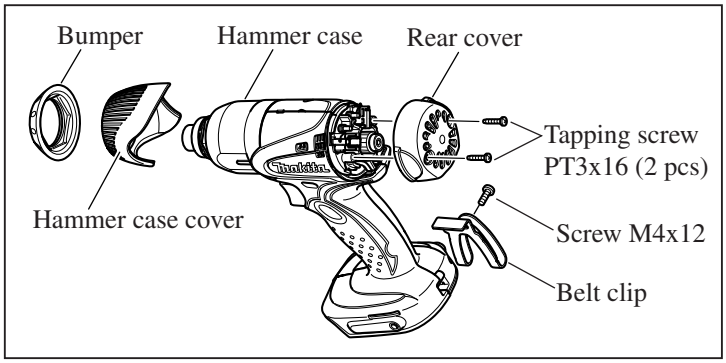

Fig. 3

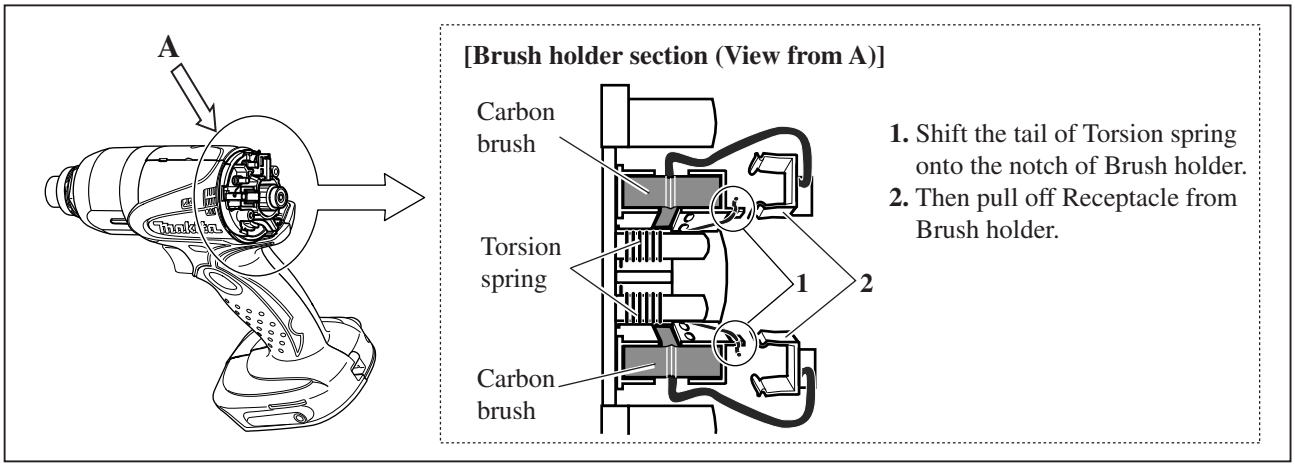

3) Separate Housing (R) from Housing (L) by removing eight PT3x16 Tapping screws.

4) Remove the assembly of the Hammer case section and the Motor section from Housing (L), then separate the Hammer case from the Motor section.

5) Attach a pair of Vise plate (No.1R041) to vise. Fix Socket 32-50 in vise securely. Then put the Hammer case section on Socket 32-50 while fitting the hexagonal portion of Bearing box in Socket 32-50. Fit Socket 30-78 over the hexagonal portion of Hammer case. Then, by turning Socket 30-78 with Torque wrench shaft 20-90N.m (No.1R223) and Ratchet head with 12.7mm square (No.1R224) clockwise, the Hammer case section can be disassembled. (**Fig. 4**)

Fig. 4

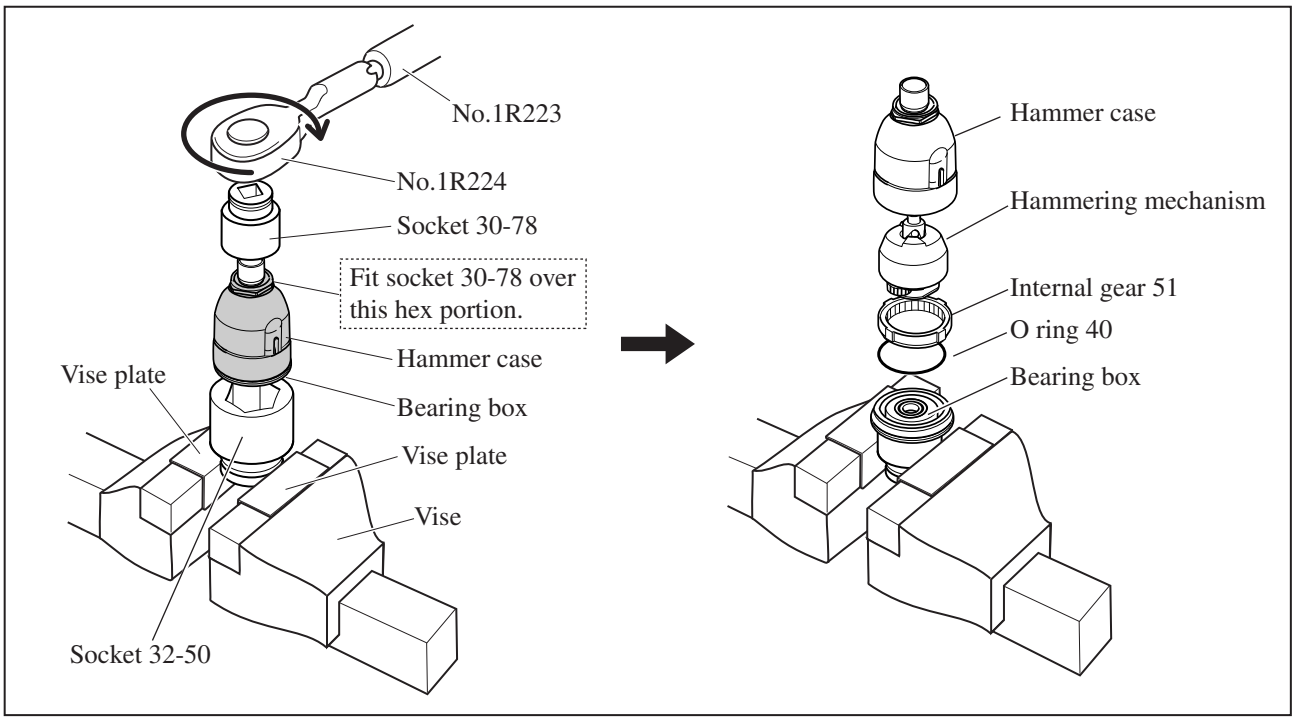

Repair

[3] -1. Disassembling/Assembling Hammering Mechanism (cont.)

6) Install Center Attachment (No.1R346) on Gear Extractor, large (1R045). (**Fig. 5**)
7) Set the Gear Extractor on the Hammering mechanism (= assembled unit of Hammer, Spindle, Spur gears, Steel balls, etc.) as illustrated in **Fig. 6**. Then turn the handle of the Gear Extractor clockwise to lower Hammer to the full.
8) Align the notch in Hammer with the top of the cam groove on Spindle. Then take steel ball 5.6 (2 pcs) out of spindle using tweezers or a slotted screwdriver magnetized with Screwdriver Magnetizer (No.1R288). (**Fig. 7**)

Fig. 5

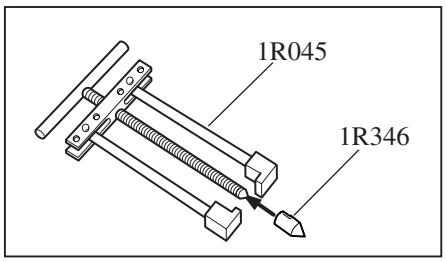

Fig. 6

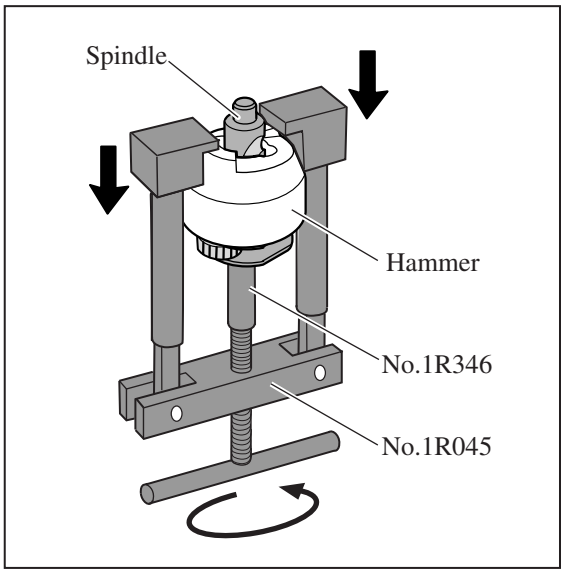

Fig. 7

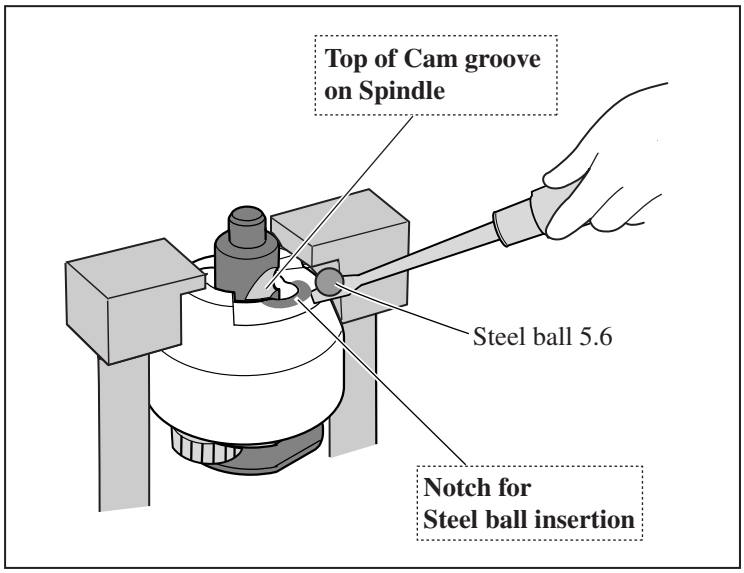

9) Remove the Gear Extractor by turning the handle counterclockwise.
10) Remove Spindle, Compression spring 45 and Cup washer 14 from Hammer as illustrated in **Fig. 8**.
Important: Be sure to lower the Hammer side so that Steel balls in Hammer cannot fall down and scatter.
11) Now Steel ball 3.5 can removed from Hammer. There are 26 steel balls in the groove on the inside of Hammer. (As illustrated in **Fig. 9**, the groove is designed to have a space equivalent to one steel ball.)

Fig. 8

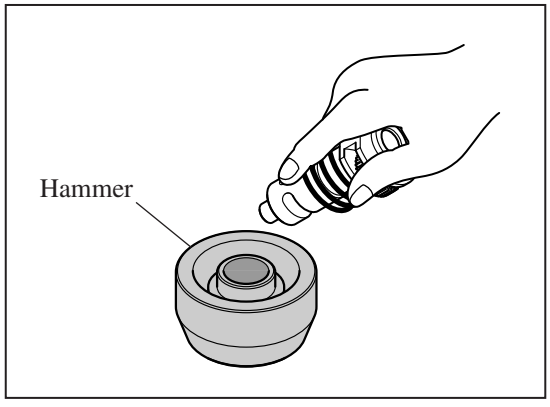

Fig. 9

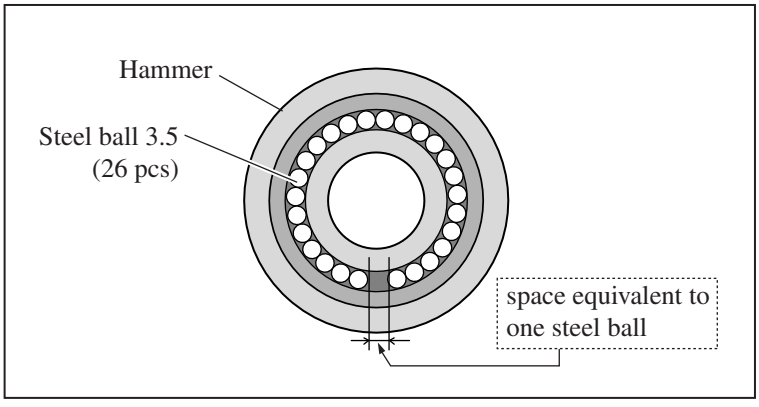

Repair

[3] -1. Disassembling/Assembling Hammering Mechanism (cont.)

ASSEMBLING

Do the reverse of assembling steps.

Note:

1) Assemble by piling component parts on Bearing box as illustrated in **Fig. 10**.
2) Make sure that twenty-six 3.5 Steel balls are in place inside Hammer.
3) Do not forget to install O ring 40 when assembling Internal gear 51 to Bearing box. (**Fig. 11**)
4) Internal gear 51 is not reversible when assembled to Bearing box. Be sure to assemble so that the stepped end of the gear face Bearing box. (**Fig. 11**)
5) Assemble Hammer case complete to Bearing box as illustrated in **Fig. 12**.

Fig. 10

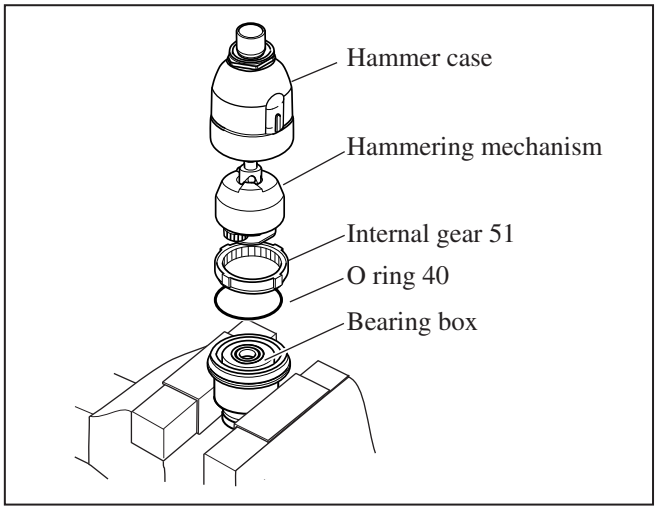

Fig. 11

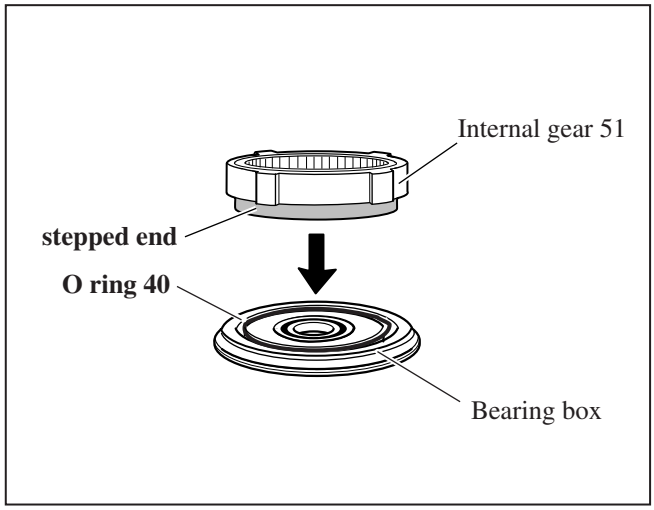

Fig. 12

Fit Hammer case complete over Internal gear 51 with the four grooves on the inside of Hammer case complete aligned with the corresponding projections on Internal gear 51.

Then, using No.1R224 and No.1R223, fasten Hammer case complete to Bearing box by turning counterclockwise to the recommended torque of **30 - 40 N.m.**

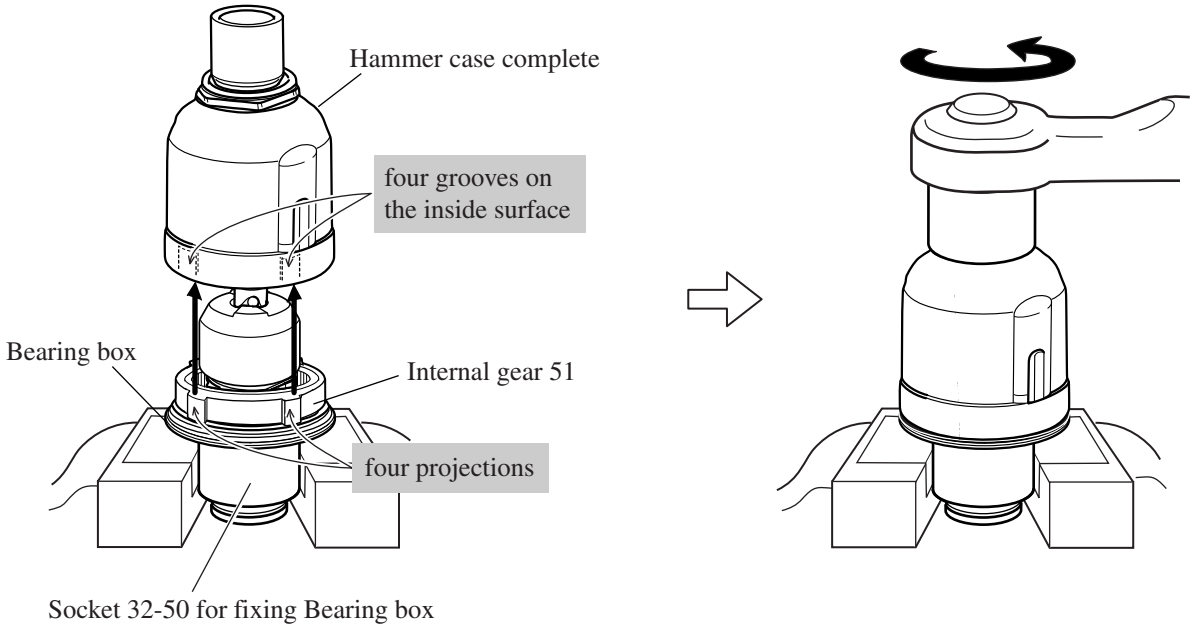

Repair

[3] -2. Disassembling/Assembling Bit Holder Section

DISASSEMBLING

1) Put Anvil on Pipe 30 (No.1R232). (**Fig. 13**)
2) Put your thumb on the top of Sleeve so that Compression spring 13 does not pop out of Sleeve. (**Fig. 14**)
3) While expanding Ring spring 11 using Retaining ring S and R pliers (No.1R291). raise the opposite side of the Ring spring with index finger. (**Fig. 14**)
4) Now the bit holder section can be disassembled as illustrated in **Fig. 15**.

Fig. 13

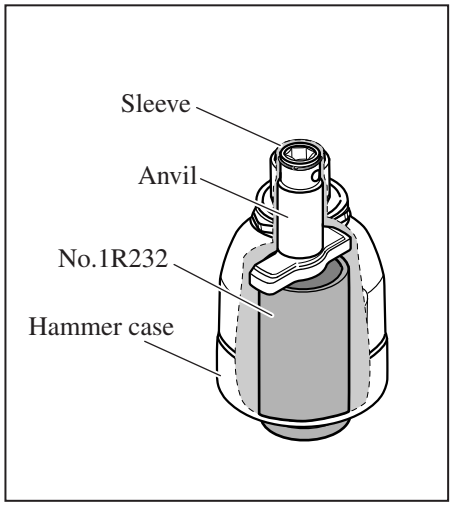

Fig. 14

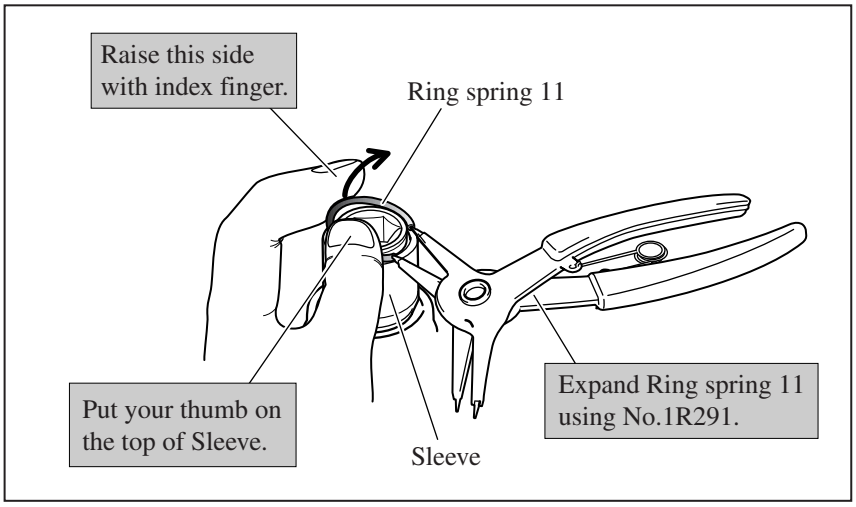

ASSEMBLING

Do the reverse of disassembling steps.
Important:
Do not forget to mount Nylon washer. (**Fig. 15**)

Fig. 15

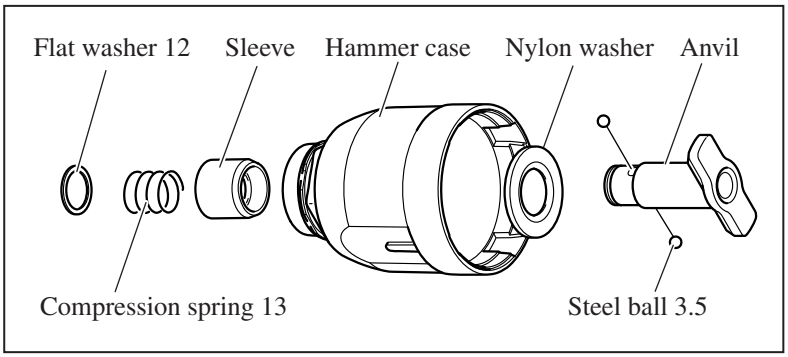

[3] -3. Disassembling/Assembling Motor Section

DISASSEMBLING

1) Separate the assembly of Armature and Yoke unit from the machine.
(Refer to 1) to 4) of [3] -1. Disassembling Hammering Mechanism.)
2) Put the assembly of Yoke unit and Armature on a work bench so that the drive end of the Armature touches the work bench.
Then separate Yoke unit from armature by pressing it down towards the work bench.
(**Fig. 16**).

Fig. 16

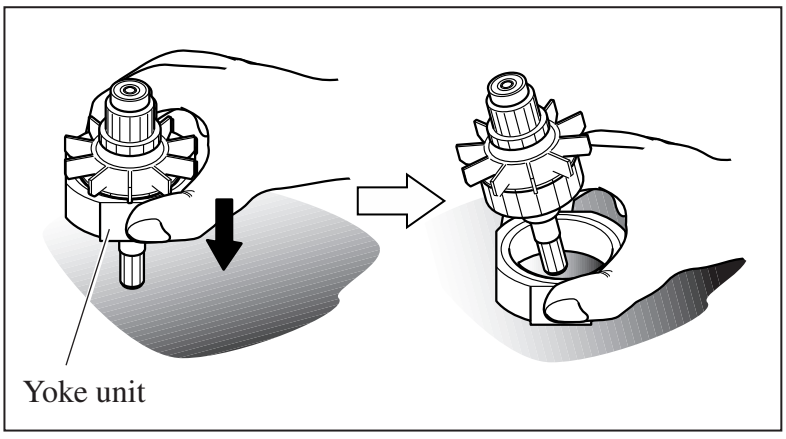

Repair

[3] -3. Disassembling/Assembling Motor Section (cont.)

ASSEMBLING

Do the reverse of disassembling steps.

Important:

1) Yoke unit is not reversible when assembled to Armature. Be sure to assemble so that the notch in Yoke unit is positioned on the drive-end of Armature. If assembled wrong, the Motor section cannot be assembled to Housing (L). (**Fig. 17**)
2) Because Yoke unit is a strong magnet, when assembling Armature to Yoke unit, be sure to hold the commutator portion as illustrated to left in **Fig. 18**. Do not hold the Armature core as illustrated to right or your fingers will be pinched between Yoke unit and the fan of Armature that is pulled strongly by the magnet force.

Fig. 17

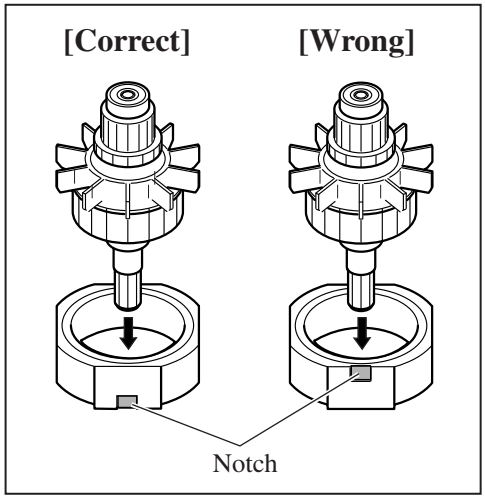

Fig. 18

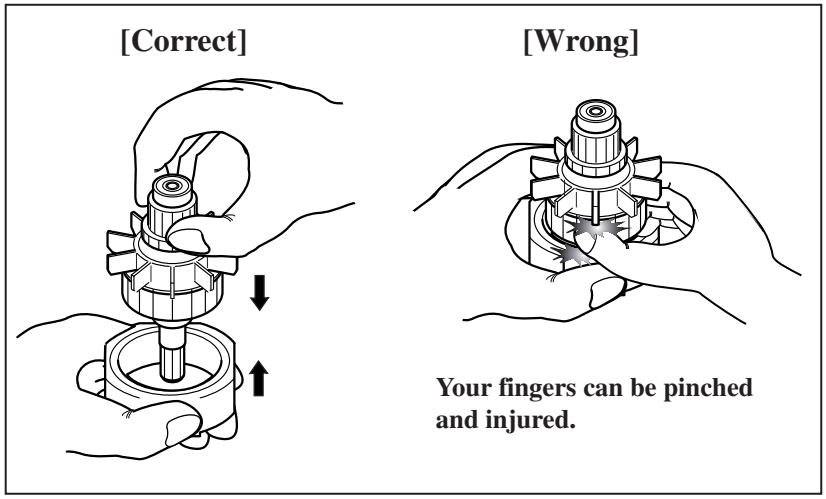

3) When assembling the Motor section to Housing (L), fit the notch in Yoke unit onto the projection on Housing (L) (**Fig. 19**)

Fig. 19

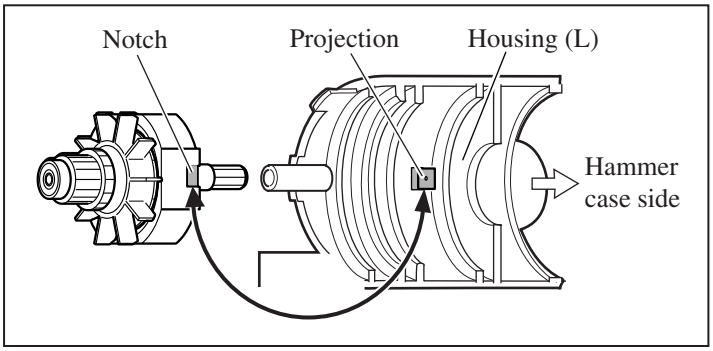

Circuit diagram

Color index of lead wires' sheath
Black
Red
Orange
Blue

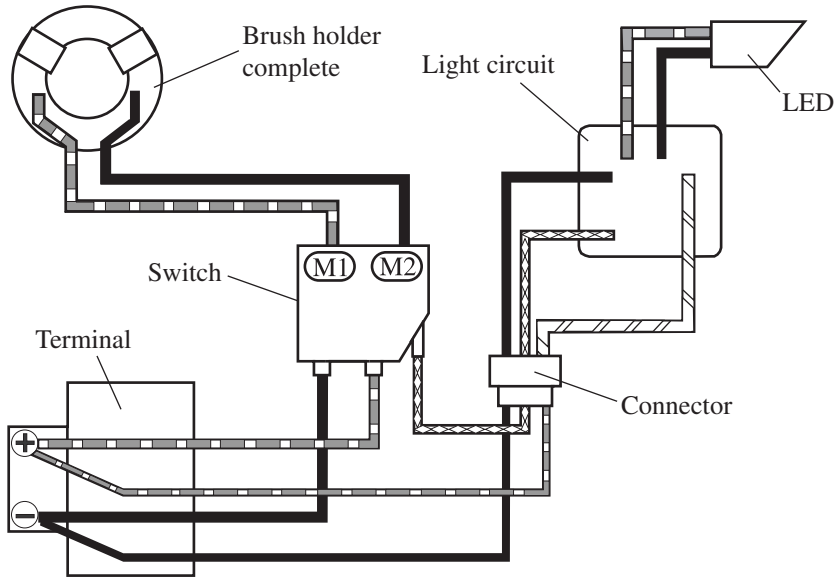

Wiring diagram

[1] Lead Wire of Carbon Brush

As illustrated to left in **Fig. 20**, put each Carbon brush into Brush holder so that its lead wire is placed outside.
Then route the lead wire of Carbon brush through the outside slot in Brush holder as illustrated to left in **Fig. 20**.
(Illustrations in **Fig. 20** is the Carbon brush section viewed from A.)

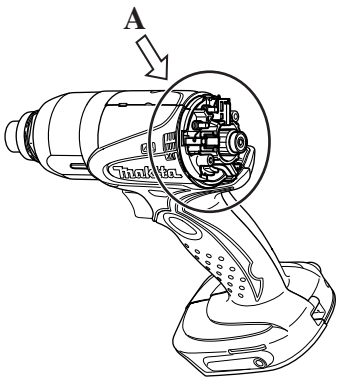

Fig. 20

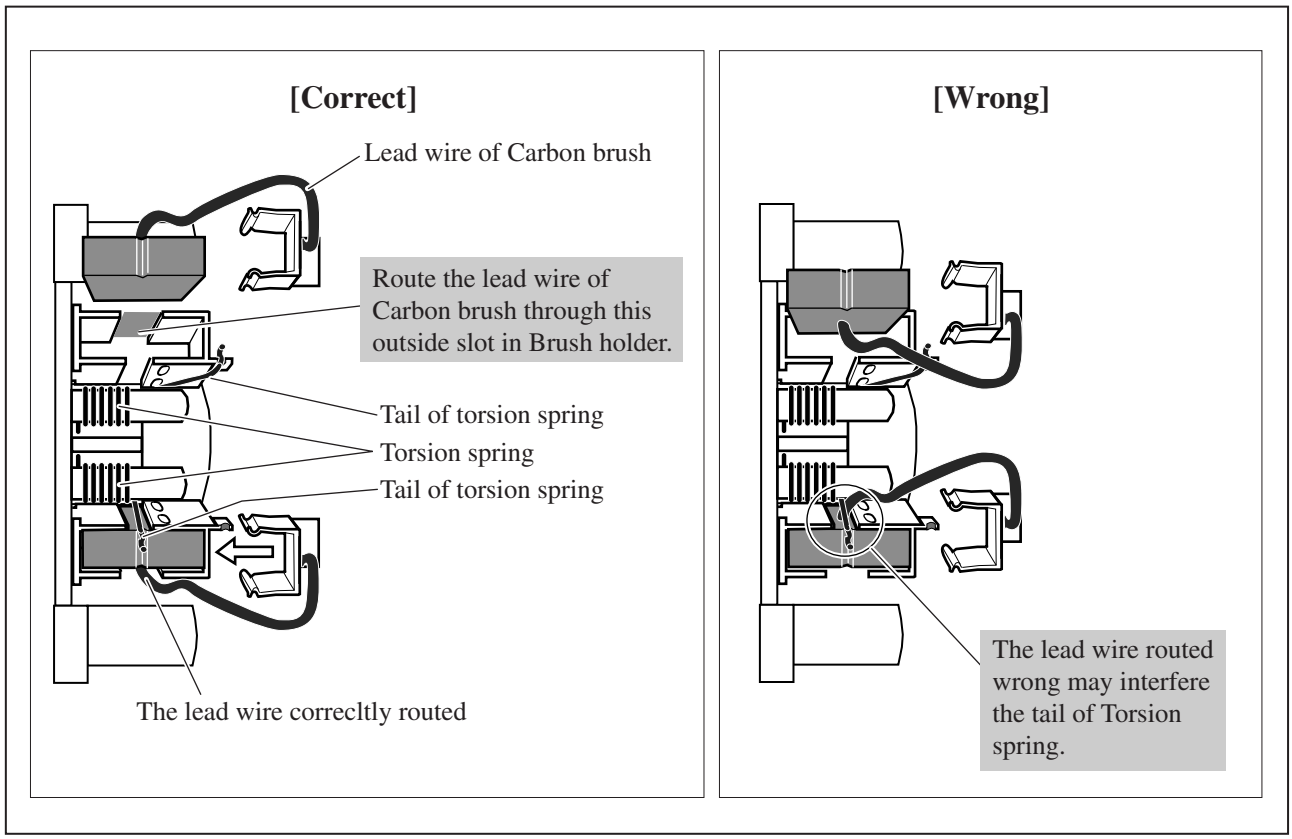

Wiring diagram

[2] Wiring in Housing

Fig. 21

[2] -1. Lead Wires of LED

As illustrated below, fix the two lead wires (red and black) of LED with lead wire holders, and route them between the pin and the boss.

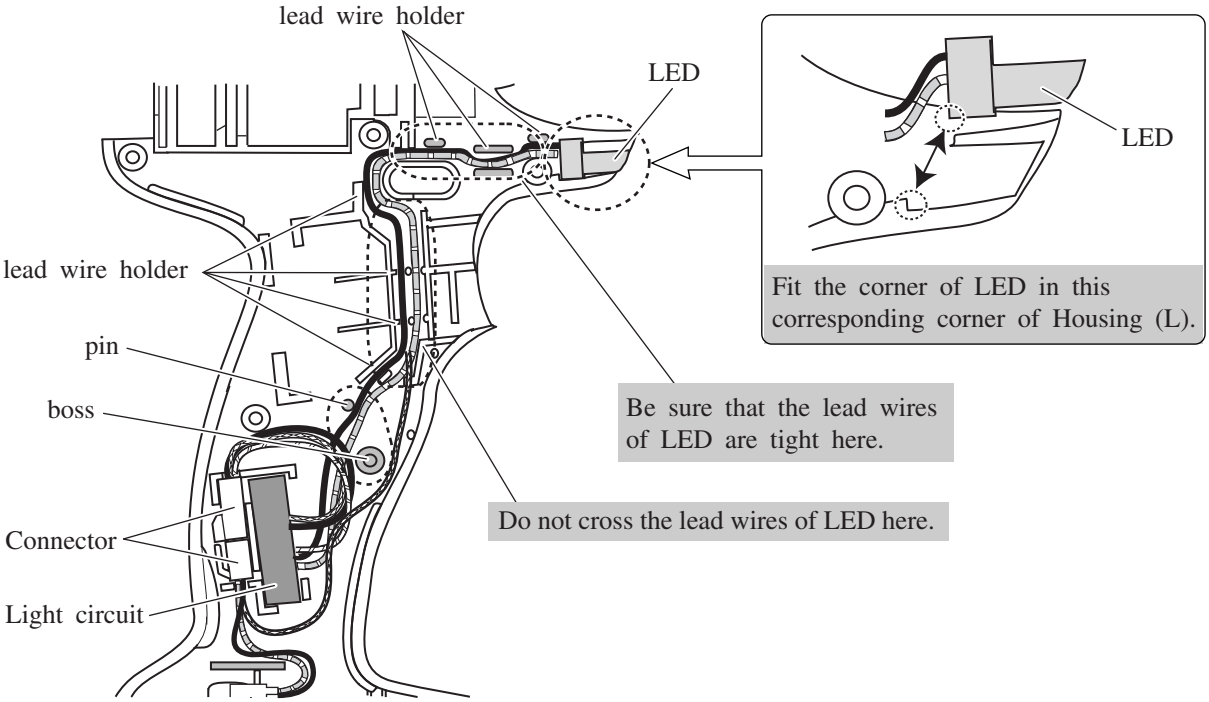
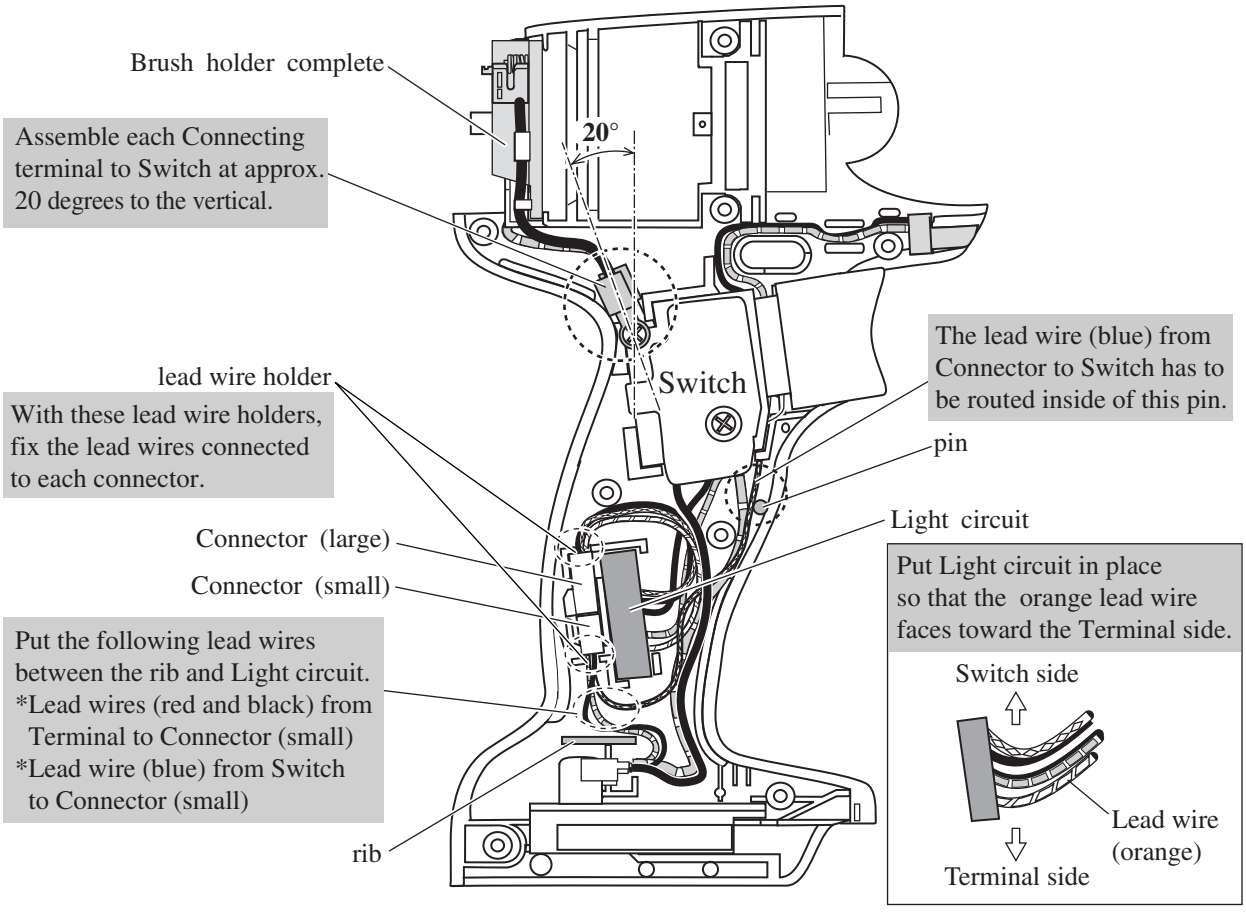
[2] -2. Other Lead Wires